finder
RELAYING INNOVATION

Light dependent relays 12 - 16 A

- Garden and night lighting
- Shop displays
- Lighting for parks
- Streetlights and car park lighting

10 SERIES

Finder reserves the right to make changes to its products and their technical specifications at any time and without prior notice, as part of its policy of continuous improvement.
The information contained in this document is provided for indicative purposes only and does not constitute a contractual obligation; errors and omissions excepted.
In the event of any discrepancy between the printed and online versions, the latter, available at findernet.com, shall prevail.

Relays for automatic control of lighting according to the ambient light level

Integral light sensor

For pole or wall mounting

10.32 - 2 NO 16 A output contacts
10.41 - 1 NO 16 A output contact

- Double pole Live and Neutral switching possible with the 10.32
- Sensitivity adjustment from 1 to 80 lux
- Cadmium free contact material
- Cadmium free light sensor (IC photo diode)
- Electronic circuit - transformer isolated
- Italian Patent "light feedback compensation" innovative principle
  Compatible with slow starting gas discharge lamps (up to 10 minutes)
- For the first 3 working cycles the delay time (On and Off) is reduced to zero in order to aid installation
- Available for supply 230 and 120 V AC (50/60 Hz)

10.32/10.41
Box clamp

For outline drawing see page 8

10.32

- Double pole switching - 2 NO 16 A for Live and Neutral switching

10.41

- Single pole switching - 1 NO 16 A for Live switching

Contact specification					
Contact configuration		2 NO (DPST-NO)		1 NO (SPST-NO)	
Rated current/Maximum peak current	A	16/30 (120 A - 5 ms)		16/30 (120 A - 5 ms)	
Rated voltage/ Maximum switching voltage	V AC	120/—	230/—	120/—	230/—
Rated load AC1	VA	1900	3700	1900	3700
Rated load AC15	VA	400	750	400	750
Rated current AC5a	A	—	5	—	5
Nominal lamp rating:					
(230 V) incandescent/halogen	W	—	2300	—	2000
fluorescent tubes with electronic ballast	W	600	1200	500	1000
fluorescent tubes with electromagnetic ballast	W	450	850	400	750
CFL	W	250	500	200	400
(230 V) LED	W	—	500	—	400
LV halogen or LED with electronic ballast	W	250	500	200	400
LV halogen or LED with electromagnetic ballast	W	500	1000	400	800
Minimum switching load	mW (V/mA)	1000 (10/10)		1000 (10/10)	
Standard contact material		$AgSnO_2$		$AgSnO_2$	
Supply specification					
Nominal voltage (U_N)	V AC (50/60 Hz)	120	230	120	230
	V DC	—		—	
Rated power AC/DC	VA (50 Hz)/W	2/—		2/—	
Operating range	AC (50 Hz)	$(0.8…1.1)U_N$		$(0.8…1.1)U_N$	
	DC	—		—	
Technical data					
Electrical life at rated load in AC1	cycles	$100 \cdot 10^3$		$100 \cdot 10^3$	
Threshold setting	lx	1…80		1…80	
Preset threshold	lx	10		10	
Delay time: switching ON/OFF	s	15/30		15/30	
Ambient temperature range	°C	–30…+70		–30…+70	
Protection category		IP 54		IP 54	
Approvals (according to type)		CE UK CA EAC			

10 SERIES
Light dependent relays 12 - 16 A

Relays for automatic control of lighting according to the ambient light level

Integral light sensor
For pole or wall mounting
10.42 - Two independent 16 A outputs with individual lux setting
10.51 - Miniature single 12 A 1 NO output
10.61 - Mounting on street light body

- Sensitivity adjustment from 1 to 80 lux
- Fixed sensivity 10 lux (± 20%) - (10.61 type)
- Cadmium free contact material
- Cadmium free light sensor (IC photo diode)
- Electronic circuit - transformer isolated (10.42 type)
- Italian Patent "light feedback compensation" innovative principle (10.51 type)
- For the first 3 working cycles the delay time (On and Off) is reduced to zero in order to aid installation
- Available for supply 230 and 120 V AC (50/60 Hz)
- Prewired with silicone wire, 500 mm length (10.61 type)

For outline drawing see page 8

		10.42		10.51		10.61
		• Two independent outputs - 2 NO 16 A		• Single pole switching - 1 NO 12 A • Miniature size		• Single pole switching - 1 NO 16 A
Contact specification						
Contact configuration		2 NO (DPST-NO)		1 NO (SPST-NO)		1 NO (SPST-NO)
Rated current/Maximum peak current	A	16/30 (120 A - 5 ms)		12/25 (80 A - 5 ms)		16/30 (120 A - 5 ms)
Rated voltage/ Maximum switching voltage	V AC	120/—	230/—	120/—	230/—	230/—
Rated load AC1	VA	1900	3700	1400	2760	3700
Rated load AC15	VA	400	750	300	600	750
Rated current AC5a	A	—	5	—	—	5
Nominal lamp rating:						
(230 V) incandescent/halogen	W	—	2000	—	1200	2000
fluorescent tubes with electronic ballast	W	500	1000	300	600	1000
fluorescent tubes with electromagnetic ballast	W	400	750	200	400	750
CFL	W	200	400	200	350	400
(230 V) LED	W	—	400	—	350	400
LV halogen or LED with electronic ballast	W	200	400	200	350	400
LV halogen or LED with electromagnetic ballast	W	400	800	300	600	800
Minimum switching load	mW (V/mA)	1000 (10/10)		1000 (10/10)		1000 (10/10)
Standard contact material		$AgSnO_2$		$AgSnO_2$		$AgSnO_2$
Supply specification						
Nominal voltage (U_N)	V AC (50/60 Hz)	120	230	120	230	230
	V DC	—		—		—
Rated power AC/DC	VA (50 Hz)/W	2/—		1.5/—		2.5/—
Operating range	AC (50 Hz)	$(0.8…1.1)U_N$		$(0.8…1.1)U_N$		$(0.8…1.1)U_N$
	DC	—		—		—
Technical data						
Electrical life at rated load in AC1	cycles	$100 \cdot 10^3$		$100 \cdot 10^3$		$100 \cdot 10^3$
Threshold setting	lx	1…80		1…80		10
Preset threshold	lx	10		10		10
Delay time: switching ON/OFF	s	15/30		15/30		15/30
Ambient temperature range	°C	–30…+70		–30…+70		–30…+70
Protection category		IP 54		IP 54		IP 54
Approvals (according to type)		CE UK CA EAC				CE UK CA EAC

J

Ordering information

Example: 10 series light dependent relay, 2 NO (DPST-NO) 16 A contact, box clamp connections, 230 V AC supply.

1 0 . 3 2 . 8 . 2 3 0 . 0 0 0 0

Series

Type
32 = Double output, live and neutral switching - 2 NO 16 A
41 = Single output, live switching - 1 NO 16 A
42 = Two independent outputs - 2 NO 16 A
51 = Single output, live switching - 1 NO 12 A
61 = Mounting on street light body - 1 NO 16 A

Supply version
8 = AC (50/60 Hz)

Supply voltage
120 = 120 V
230 = 230 V

Technical data

Insulation		**10.32 / 41 / 42**		**10.51**		**10.61**
Dielectric strength between open contacts	V AC	1000		1000		1000
Conducted disturbance immunity						
Surge (1.2/50 µs) on L and N (differential mode)	kV	4		4		6
Other data						
Cable grip	Ø mm	(8.9…12)		(7.5…9)		—
Screw torque	Nm	0.8		0.8		—
Max. wire size		solid cable	stranded cable	solid cable	stranded cable	—
	mm²	1 x 6 / 2 x 4	1 x 6 / 2 x 2.5	1 x 4 / 2 x 2.5	1 x 4 / 2 x 2.5	—
	AWG	1 x 10 / 2 x 12	1 x 10 / 2 x 14	1 x 12 / 2 x 14	1 x 12 / 2 x 14	—
Output wires						
Material		—		—		Silicone rubber UV resistant
Size	mm²	—		—		1.5
Length	mm	—		—		500, ends-ferruled
Rated insulation voltage	kV	—		—		0.6/1
Max temperature	°C	—		—		120

Functions

LED*	**10.32 / 10.41 / 10.42**		**10.51**	
	Supply voltage	NO output contact	Supply voltage	NO output contact
	OFF	Open	OFF or ON	Open
	ON	Open	ON	Closed
	ON	Open (Timing in Progress)	ON	Open (Timing in Progress)
	ON	Closed	—	—

* The LED is located under the terminal cover, close to the Lux adjustment knob. It indicates the contact status and assists in the test and setting of the correct light threshold level.

Wiring diagrams

Type 10.32

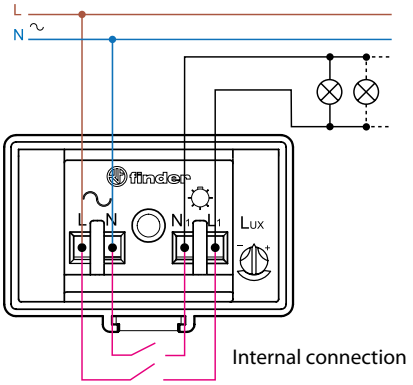

Type 10.41

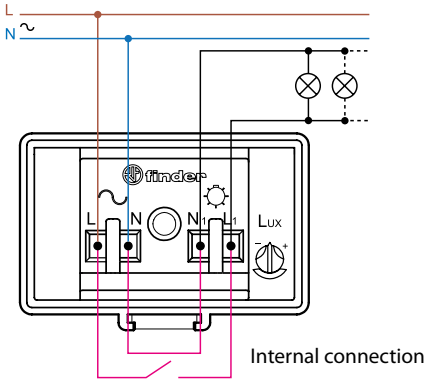

Type 10.42

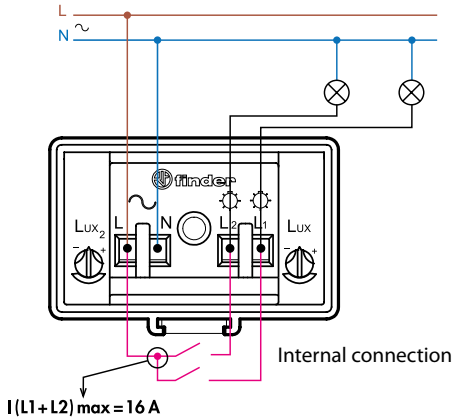

Type 10.51

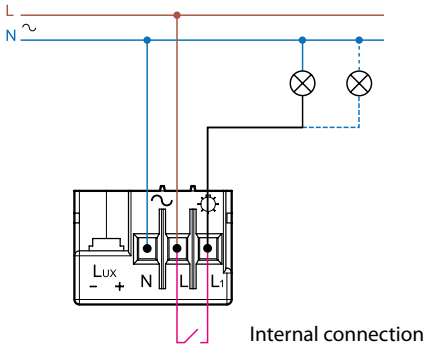

Type 10.61

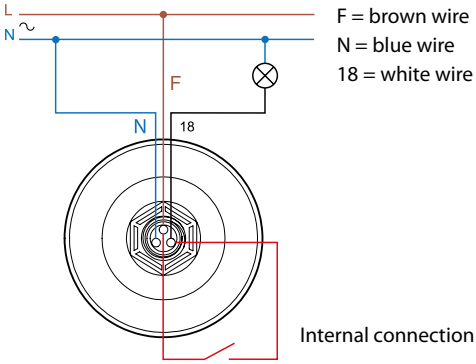

F = brown wire
N = blue wire
18 = white wire

J

Advantage of the "light feedback compensation" principle

Light dependent relay where the lighting being controlled does not influence the light level seen by the light sensor

Traditional light dependent relay where the lighting being controlled influences the light level seen by the light sensor

Type 10.32, 10.41 and 10.51 light dependent relay with "light feedback compensation"

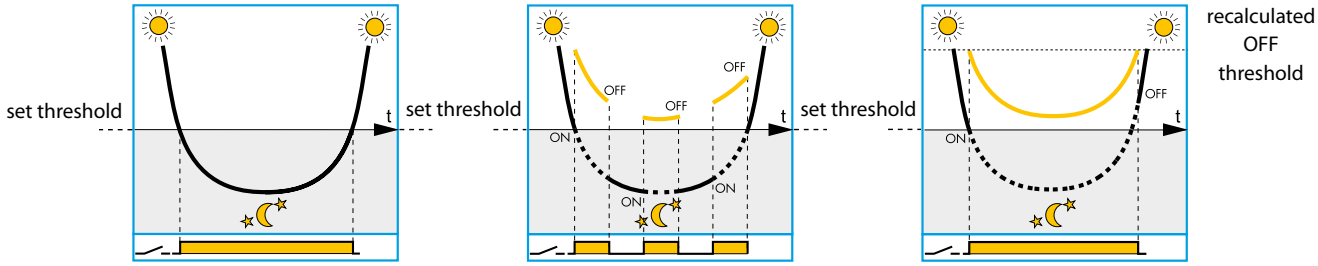

Correct functioning - provided the sensor can be shielded from the effects of the controlled lighting switching On and Off

Incorrect functioning where the lamps cycle between On and Off, because their effect is being detected by the light sensor

The innovative principle of "light feedback compensation" avoids the annoying and damaging effects of the lamps repeatedly "hunting" between On and Off, due to poor installation

Ambient light level as measured by the light dependent relay's integral light sensor.

Ambient light + controlled light level as measured by the light dependent relay's integral light sensor.

Notes

1. It is good practice to try to achieve a correct installation where the light emitted from the lamp(s) does not influence the light level seen by the sensor, although the "light feedback compensation" principle will help when this is not fully achievable. In this case it should be appreciated that the "light feedback compensation" principle may delay slightly the time of Switch Off - beyond the ideal.
2. The compensation principle is not effective where the combined effect of the ambient light and the controlled lighting exceeds 120 lux.
3. The 10.32 and 10.41 types are compatible with gas discharge lamps that attain full output within 10 minutes, since the electronic circuit monitors lamps' light output over a 10 minutes period to achieve a true assessment of its contribution to the overall lighting level.

Outline drawings

Type 10.32/10.41/10.42
Box clamp

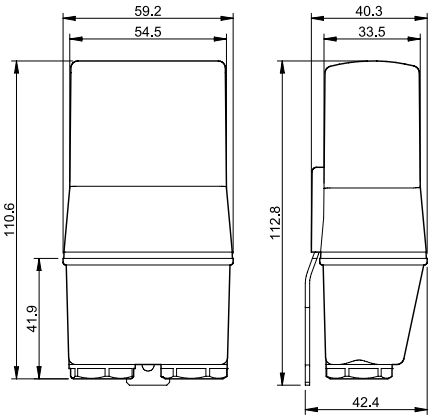

Type 10.51
Box clamp

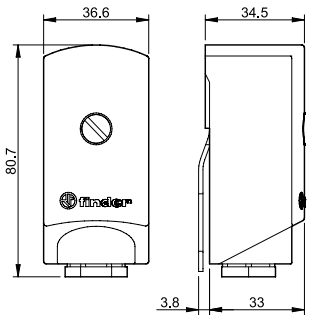

Type 10.61

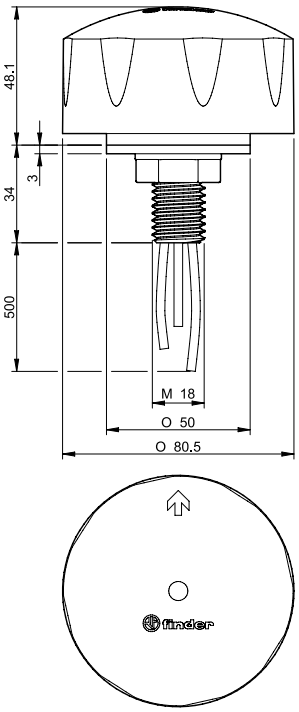

J