finder
RELAYING INNOVATION

19
SERIES

Relay actuators & Status indicating modules

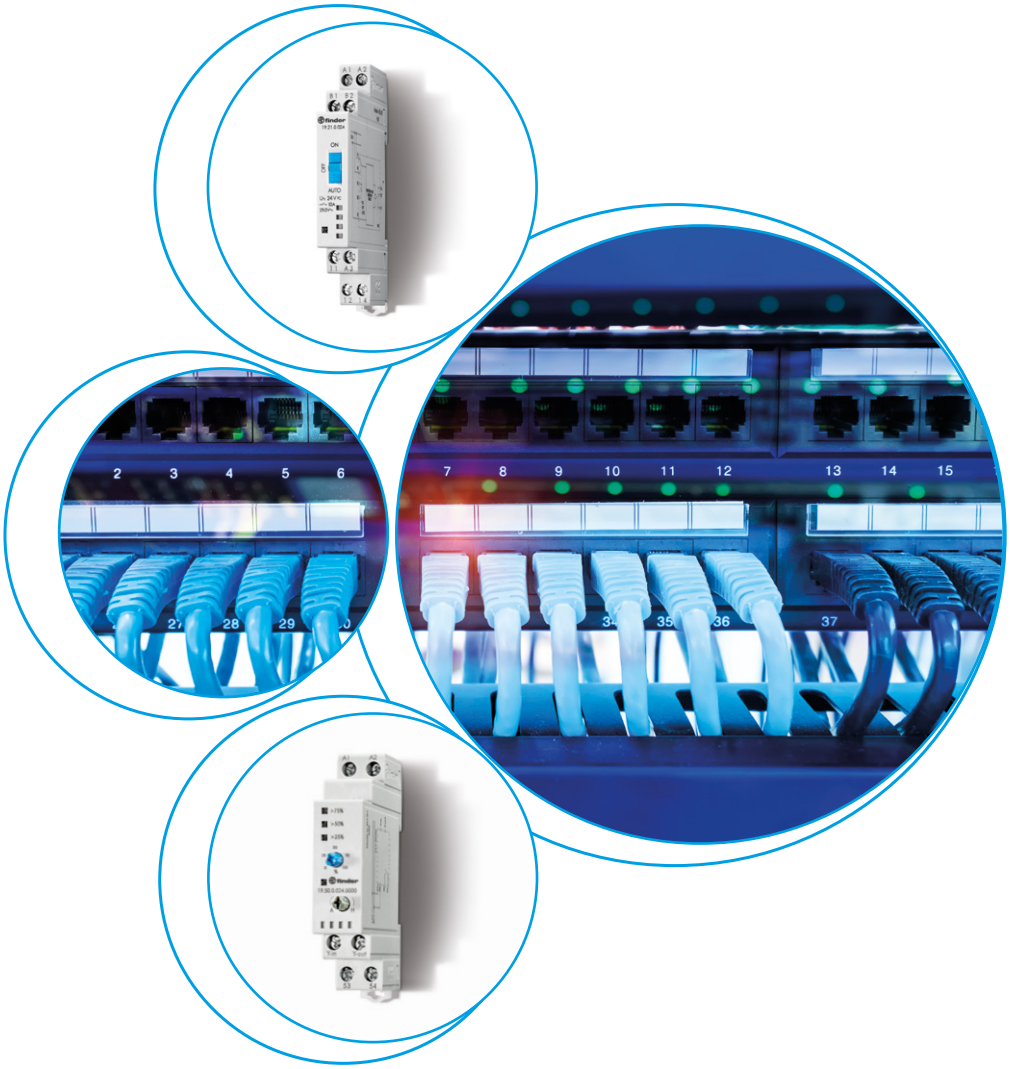

Panels for electrical distribution

Finder reserves the right to make changes to its products and their technical specifications at any time and without prior notice, as part of its policy of continuous improvement.
The information contained in this document is provided for indicative purposes only and does not constitute a contractual obligation; errors and omissions excepted.
In the event of any discrepancy between the printed and online versions, the latter, available at findernet.com, shall prevail.

Auto/Off/On output module 10 A

- Auto/Off/On output module intended to permit the automatic control of pumps, blowers or motor groups. Or, in the case of installation, maintenance or failure, to permit the load equipment to be turned "Off" or turned "On"
- Ideal interface for PLC and electronic systems
- Only 11.2 mm wide
- 3 function selector switch:
  - Auto: works as a monostable relay (following A3 input)
  - Off: relay permanently OFF
  - On: relay permanently ON
- 24 V AC/DC supply and module input
- 35 mm rail (EN 60715) mounting

Application examples:

- control of pumps, blowers or motor groups
- primarily suited to Industrial control systems

19.21.0.024.0000
Box clamp

Wiring diagram

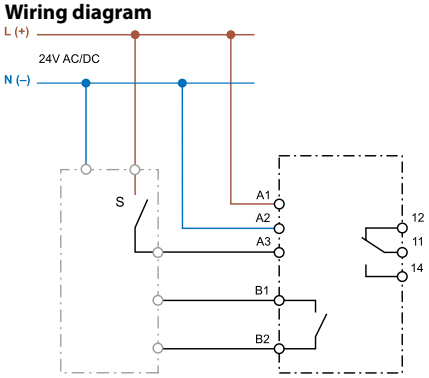

Controller, PLC Type 19.21

For outline drawing see page 8

19.21.0.024.0000

- 1 CO output contact
- 11.2 mm wide
- Feedback contact

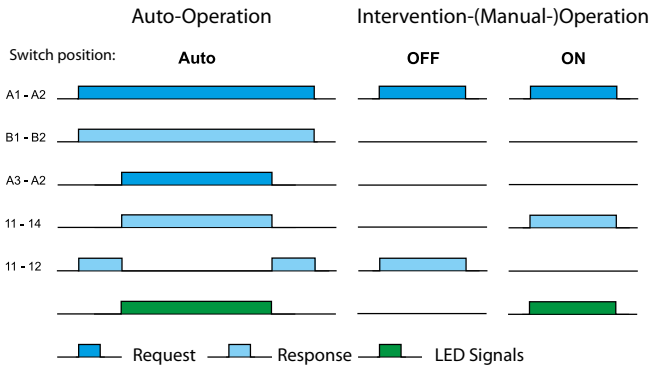

B1-B2 feedback to the controller signaling Auto-operation
A3-A2 "Auto" signal from Controller

Contact specification		
Contact configuration		1 CO (SPDT)
Rated current/Maximum peak current	A	10/15
Rated voltage/ Maximum switching voltage	V AC	250/400
Rated load AC1	VA	2500
Rated load AC15 (230 V AC)	VA	500
Single phase motor rating (230 V AC)	kW	0.44
Breaking capacity DC1 (24/110/220 V)	A	10/0.3/0.12
Minimum switching load	mW (V/mA)	300 (5/5)
Standard contact material		$AgSnO_2$
Feedback contact specification (terminals B1-B2)		
Contact configuration		1 NO (SPST-NO)
Maximum current	mA	300
Rated voltage	V AC/DC	24
Supply & Input specification		
Nominal voltage (U_N)	V AC (50/60 Hz)	24
	V DC	24
Rated power	VA (50 Hz)/W	0.6/0.4
Operating range	AC	$(0.8…1.1)U_N$
	DC	$(0.8…1.1)U_N$
Technical data		
Ambient temperature range	°C	–20…+50
Protection category		IP 20
Approvals (according to type)		CE UKCA EAC cULus

B

Analogue override module - Auto/Hand (0…10)V

- Analogue output module intended to provide, by the selection switch on the front panel, a (0…10)V output, automatically or by hand.
- With the selector switch in position "A" (Automatic) the (0…10)V signal is derived from the controller.
  In position "H" (Hand) the controller signal is ignored and the (0…10)V signal is derived directly from the potentiometer setting on the facia of the module
- The level of the (0…10)V output signal is displayed by 3 green LEDs, set at > 25%, > 50% and > 75%.
- 24 V AC/DC supply
- 35 mm rail (EN 60715) mounting

Application examples:

- permits the direct control of proportional valves under exceptional circumstances or where the automatic controller has failed

19.50.0.024.0000
Box clamp

Wiring diagram

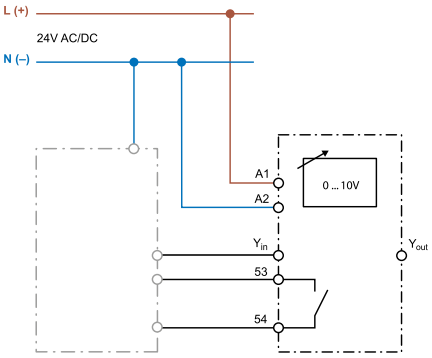

Controller, PLC Type 19.50

For outline drawing see page 8

19.50.0.024.0000

- Analogue output (0…10)V, plus 1 feedback output contact
- 17.5 mm wide
- LED indicator

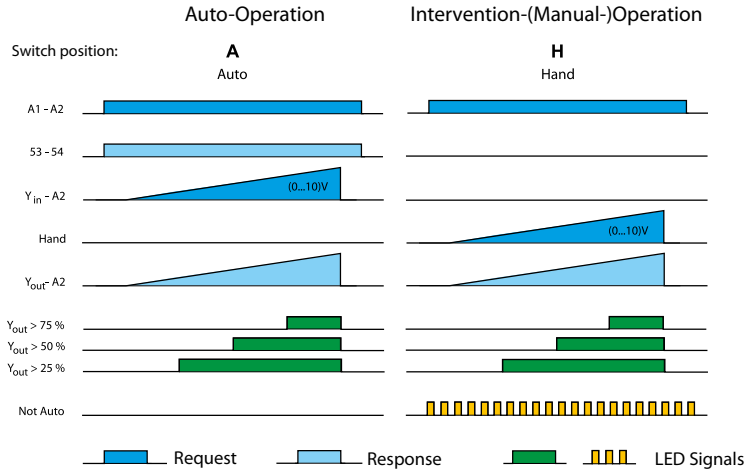

53-54 feedback to the controller signaling Auto-operation
Y_{in}-A2 variable (0…10)V DC from the controller
Hand (0…10)V DC value set by the potentiometer

(0…10)V Signal specification (terminal Y_{in})		
Input control signal	V DC	0…10 (Imax 20 mA - short-circuit protected)
Green LED 25%		> 2.5 V
Green LED 50%		> 5 V
Green LED 75%		> 7.5 V
Feedback output specification (terminals 53-54)		
Output configuration		1 NO (SPST-NO)
Maximum / Minimum current	mA	100/10
Rated voltage	V AC/DC	24
Supply & Input specification		
Nominal voltage (U_N)	V AC (50/60 Hz)	24
	V DC	24
Rated power AC/DC	VA (50 Hz)/W	0.9/0.7
Operating range	AC	(0.8…1.1)U_N
	DC	(0.8…1.1)U_N
Technical data		
Ambient temperature range	°C	–20…+50
Protection category		IP 20
Approvals (according to type)		CE UKCA EAC

V-2026, www.findernet.com

Power relay module 16 A

- Suitable for Lamps load
- $AgSnO_2$ contacts for heavy duty, high inrush current loads
- DC supply (12 or 24 V)
- LED indicator
- Reinforced insulation between supply and contacts
- Cadmium Free contacts
- 35 mm rail (EN 60715) mounting

19.91.9.0xx.4000
Box clamp

Wiring diagram

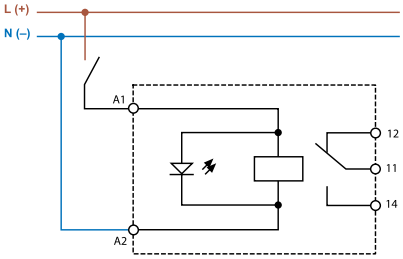

19.91.9.0xx.4000

- 1 Pole changeover contact
- 17.5 mm

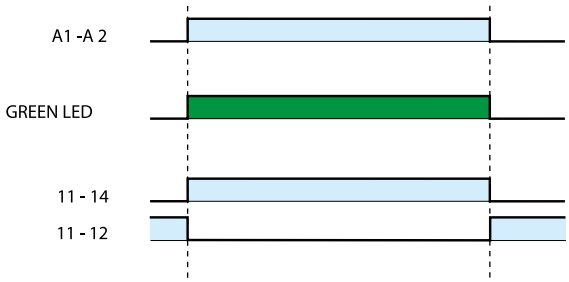

For outline drawing see page 8

Contact specification		
Contact configuration		1 CO (SPDT)
Rated current/Maximum peak current	A	16/30 (120 A - 5 ms)
Rated voltage/ Maximum switching voltage	V AC	250/440
Rated load AC1	VA	4000
Rated load AC15 (230 V AC)	VA	750
Nominal lamp rating (230 V):		
incandescent/halogen	W	2000
fluorescent tubes with electronic ballast	W	1000
fluorescent tubes with electromagnetic ballast	W	750
CFL	W	400
(230 V) LED	W	400
halogen or LED with electronic ballast	W	400
halogen or LED with electromagnetic ballast	W	800
Minimum switching load	mW	300 (5 V/5 mA)
Standard contact material		$AgSnO_2$
Coil specification		
Nominal voltage (U_N)	V DC	12 - 24
Rated power DC	W	0.5
Operating range		(0.8 … 1.1)U_N
Technical data		
Mechanical life AC/DC	cycles	$10 \cdot 10^6$
Electrical life at rated load AC1	cycles	$80 \cdot 10^3$
Operate/release time	ms	12/8
Ambient temperature range	°C	–20…+50
Protection category		IP 20
Approvals (according to type)		CE UKCA EAC

B

Ordering information

Example: 19 series Auto/Off/On override module, 1 CO (SPDT) 10 A contact, 24 V AC/DC supply.

1 9 . 2 1 . 0 . 0 2 4 . 0 0 0 0

Series

Type
21 = Auto/Off/On output module, 11.2 mm
50 = Analogue override module (0…10)V
91 = Power relay module

Supply version
0 = AC (50/60 Hz)/DC
9 = DC

Supply voltage
012 = 12 V
024 = 24 V

Contact circuit
0 = Standard

Contact material
0 = Standard for 19.21, 19.50
4 = Standard for 19.91

Codes / Module width
19.21.0.024.0000/11.2 mm
19.50.0.024.0000/17.5 mm
19.91.9.012.4000/17.5 mm
19.91.9.024.4000/17.5 mm

Technical data

Insulation		**19.21**	**19.50**	**19.91**
Dielectric strength (V AC)	between supply and contacts	3000	—	4000
	between open contacts	1000	—	1000
	between supply and feedback output	2000	1500	—
EMC specifications				
Type of test		**Reference standard**	**19.21/91**	**19.50**
Electrostatic discharge	contact discharge	EN 61000-4-2	4 kV	
	air discharge	EN 61000-4-2	8 kV	
Radiated electromagnetic field (80…1000 MHz)		EN 61000-4-3	30 V/m	
Fast transients (burst) (5-50 ns, 5 kHz)		EN 61000-4-4	4 kV	
Voltage pulses (1.2/50 µs)	common mode	EN 61000-4-5	2 kV	1 kV
on supply terminals	differential mode	EN 61000-4-5	1 kV	0.5 kV

Terminals		**19.21**		**19.50/91**	
Max. wire size		solid cable	stranded cable	solid cable	stranded cable
	mm^2	1 x 4 / 2 x 2.5	1 x 4 / 2 x 2.5	1 x 6 / 2 x 4	1 x 4 / 2 x 2.5
	AWG	1 x 12 / 2 x 14	1 x 12 / 2 x 14	1 x 10 / 2 x 12	1 x 12 / 2 x 14
Screw torque	Nm	0.5		0.8	
Wire strip length	mm	7		9	

Wiring diagrams - *Application examples*

Type 19.21

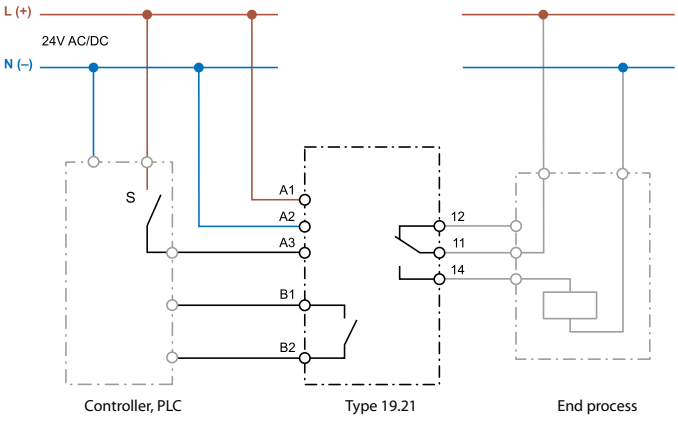

Type 19.50

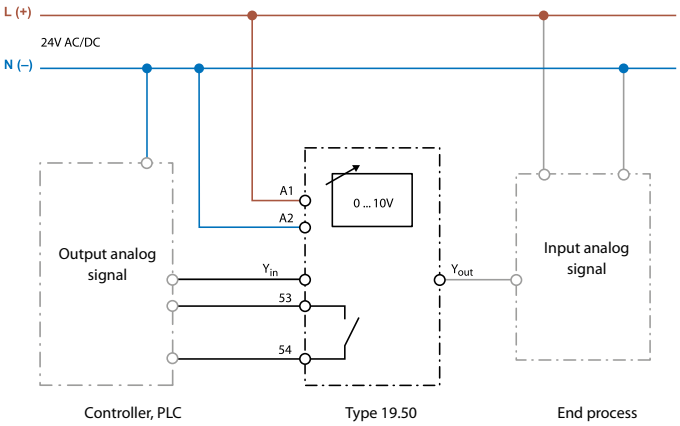

In selector position A (Automatic) the (0…10)V controller variable is transferred via Y_{in} - A2 and Y_{out} to the end process.
In selector position H (Hand) the (0…10)V value set by the regulator is transferred via Y_{out} to the end process.

B

Outline drawings

Type 19.21
Box clamp

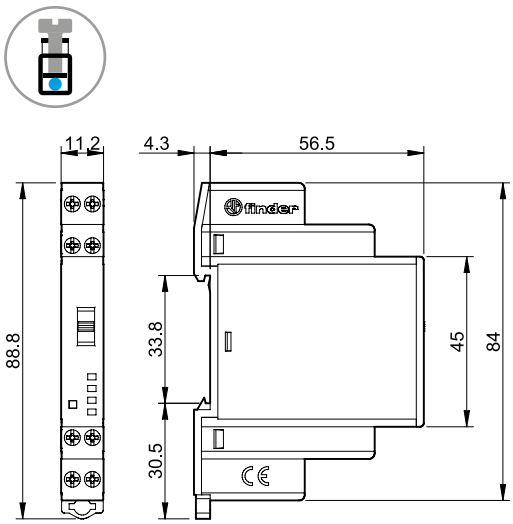

Type 19.50
Box clamp

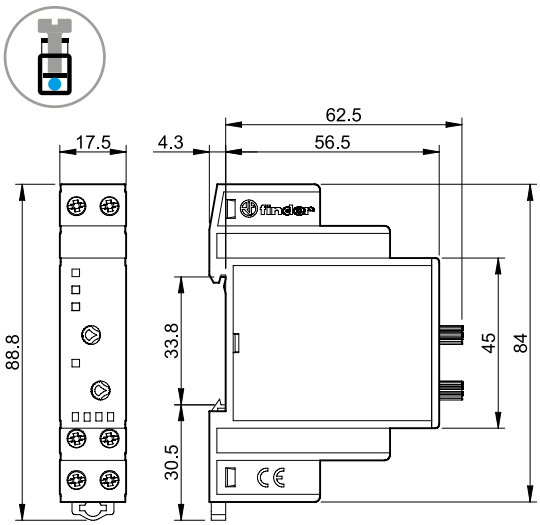

Type 19.91
Box clamp

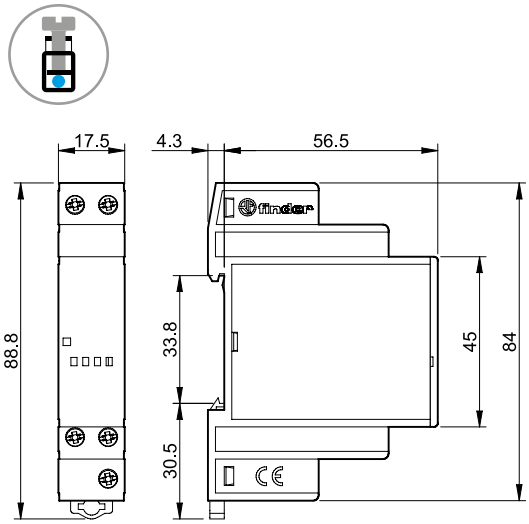

Accessories

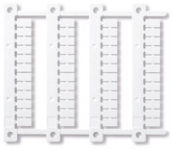

060.48

Sheet of marker tags (CEMBRE Thermal transfer printers) for 19.21/50/91 types, (48 tags) 6 x 12 mm	060.48

019.01

Identification tag, for 19.50 types, plastic, 1 tag, 17 x 25.5 mm	019.01

020.01

Adaptor for panel mounting, for 19.21/50/91 types, plastic, 17.5 mm wide	020.01

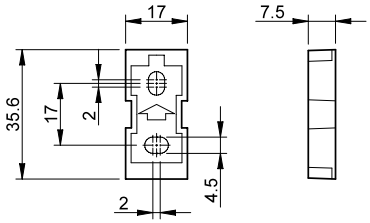

B

Application notes

Intervention Modules
The demand for security apparatus, heating, air conditioning or efficient energy use in offices, hotels, and private homes or in industrial space is growing constantly, leading to the installation of increasingly complex electronic systems. But what happens if these systems malfunction and a qualified service technician will only be available in a few hours, or even days?

With the use of carefully installed intervention modules, a trained caretaker or security guard can be in a position to recognize interruptions in service, and by manual intervention perform the necessary override actions to maintain system operation until a repair can be effected.

Digital Override control module
Auto-Off-On output module (Type 19.21)
Many processes or systems are automatically controlled by an electronic control system or by a Programmable Logic Controller.
In the event of an electronic system malfunction it is important, in order to avoid damage or downtime, to plan for the possibility of controlling the process manually. An Auto-Off-On Module can provide this, located between the output of the electronic system (Controller) and the process to be controlled (End Process) - bypassing the malfunctioning control unit in a planned way. For malfunctioning electronic systems, the process to be controlled can be manually switched On or Off, as needed, using the switch on the front of the unit. Under healthy functioning of the electronic system, the switch is left in the Auto position. In this configuration the process is controlled by the normal functioning of the electronic system and its output. It may be important to know (remotely) if the process is being controlled manually or automatically, in which case the feedback contact on the Auto–Off–On module 19.21 can provide this.

Analogue Override control module
Analogue output module (0…10)V (Type 19.50)
This module can be installed where there is need to give a manually adjustable analog signal (0…10)V priority over an analog signal from a electronic control unit or PLC, or to override and replace a malfunctioning signal.
The Analogue override module provides, by the selection switch on the front panel, a (0…10)V output signal either generated automatically or by hand. With the selector switch in position "A" (Automatic) the (0…10)V signal at Y_{out}-A2 is derived from the controller signal applied to terminals Y_{in}-A2. In position "H" (Hand) the controller signal is ignored and the (0…10)V signal is derived directly from the potentiometer setting on the module front panel.
Operation in switch position H is indicated by a blinking yellow LED, and by the opening of contact 51-52 – which could be used to report the override condition to the central control room.
The level of the (0…10)V output signal is displayed by 3 green LEDs, set at > 25%, > 50% and > 75%