finder
RELAYING INNOVATION

Step relays 10 A

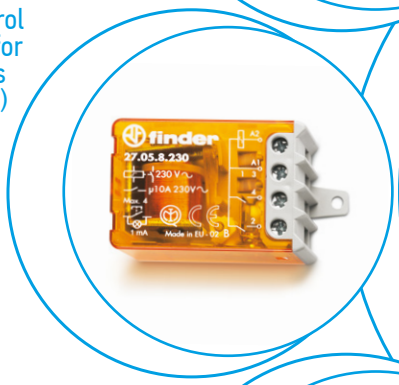

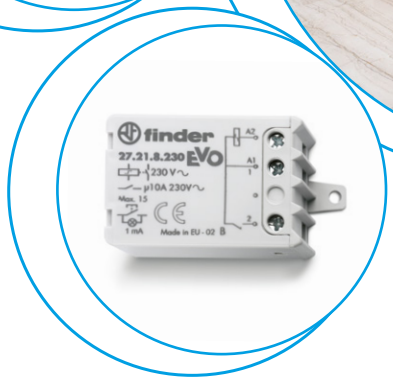

Lighting control in corridors (for hotels, offices and hospitals)

Bedroom light control

Living room light control

27
SERIES

Finder reserves the right to make changes to its products and their technical specifications at any time and without prior notice, as part of its policy of continuous improvement.
The information contained in this document is provided for indicative purposes only and does not constitute a contractual obligation; errors and omissions excepted.
In the event of any discrepancy between the printed and online versions, the latter, available at findernet.com, shall prevail.

1 or 2 Pole electromechanical step relay, for electrically common coil and contact circuits

27.0x - Connect up to 24 illuminated push buttons with the addition of module 027.00

27.2x - Connect up to 15 illuminated push buttons (without additional module) - incorporates coil power limiter to permit continuous coil energisation

- Choice of 3 switching sequences
- Screw terminal connections
- AC coil
- Panel mount
- Cadmium free contact material
- Italian Patent

	27.0x	**27.2x** EVO
	• Single or 2 double phase switch 1 NO (SPST-NO) or 2 NO (DPST-NO)	• Single or 2 double phase switch 1 NO (SPST-NO) or 2 NO (DPST-NO) with coil power limiter
27.0x/27.2x Screw terminal For outline drawing see page 5	27.01 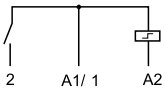 27.05 - 27.06 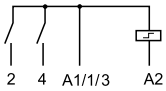	27.21 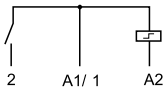 27.25 - 27.26 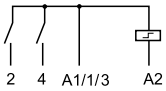

Contact specification				
Number of contacts		1 or 2		1 or 2
Rated current/Maximum peak current	A	10/20		10/20
Rated voltage/ Maximum switching voltage	V AC	110/—	230/—	230/—
Rated load AC1	VA	1100	2300	2300
Rated load AC15	VA	250	500	500
Nominal lamp rating:				
(230 V) incandescent/halogen	W	—	1000	1000
fluorescent tubes with electronic ballast	W	200	400	400
fluorescent tubes with electromagnetic ballast	W	180	360	360
CFL	W	100	200	200
(230 V) LED	W	—	200	200
LV halogen or LED with electronic ballast	W	100	200	200
LV halogen or LED with electromagnetic ballast	W	200	400	400
Minimum switching current	mW (V/mA)	10		10
Standard contact material		AgNi		AgNi
Coil specification				
Nominal voltage (U_N)	V AC (50/60 Hz)	110	230	230
	V DC	—		—
Pickup/continuous power	VA (50 Hz)	4/4		25/1
Operating range	AC 50 Hz/AC 60 Hz	$(0.8…1.1)U_N$ / $(0.85…1.1)U_N$		$(0.8…1.1)U_N$ / $(0.85…1.1)U_N$
	DC	—		—
Technical data				
Mechanical life AC/DC	cycles	$300 \cdot 10^3$		$300 \cdot 10^3$
Electrical life at rated load in AC1	cycles	$100 \cdot 10^3$		$100 \cdot 10^3$
Max no. of illuminated push-button	(≤ 1 mA)	4 (24 with module 027.00)		15
Minimum/Maximum impulse duration		0.1 s/1 h (according to EN 60669)		0.1 s/continuous
Ambient temperature range	°C	–40…+40		–40…+40
Protection category		IP 20		IP 20
Approvals (according to type)		CE UK CA EAC		

Ordering information

Example: 27 series screw terminal, panel mount step relay, single phase switch 1 NO (SPST-NO) 10 A contact, coil rated 230 V AC.

2 7 . 0 1 . 8 . 2 3 0 . 0 . 0 . 0 . 0

Series

Type
0 = Clamp terminal
2 = Clamp terminal, with coil power limiter

No. of poles
1 = Single phase switch 1 NO (SPST-NO)
5 = 4 sequences double phase switch 2 NO (DPST-NO)
6 = 3 sequences double phase switch 2 NO (DPST-NO)

Coil version
8 = AC (50/60 Hz)

Coil voltage
See coil specifications

Technical data

Other data		27.01, 27.21		27.05, 27.06, 27.25, 27.26	
Power lost to the environment with rated current and coil de-energised	W	0.9		1.8	
Screw torque	Nm	0.8		0.8	
Max. wire size		solid cable	stranded cable	solid cable	stranded cable
	mm²	2 x 2.5	1 x 4 / 2 x 2.5	2 x 2.5	1 x 4 / 2 x 2.5
	AWG	2 x 14	1 x 12 / 2 x 14	2 x 14	1 x 12 / 2 x 14

Coil specifications

Types 27.01, 27.05, 27.06

Nominal voltage	Coil code	Operating range (50 Hz)		Resistance	Consumption I at U_N
U_N		U_{min}	U_{max}	R	(50 Hz)
V		V	V	Ω	mA
110	**8**.110	88	121	1400	42.0
230	**8**.230	184	253	6500	17.5

Type	Number of steps	Sequence			
		1	2	3	4
27.01/21	2				
27.05/25	4				
27.06/26	3				

Types 27.21, 27.25, 27.26

Nominal voltage	Coil code	Operating range (50 Hz)		Resistance	Consumption	
					pick up	continuous
U_N		U_{min}	U_{max}	R	I at U_N (50 Hz)	I at U_N (50 Hz)
V		V	V	Ω	mA	mA
230	**8**.230	184	253	1250	100	4

K

Wiring diagram

Type 27.01/05/06

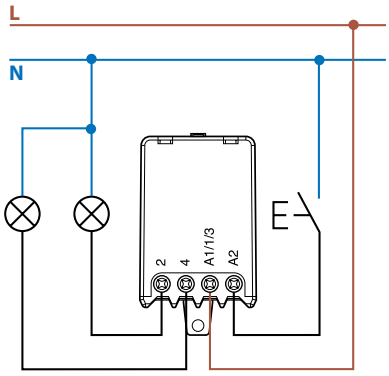

Type 27.21/25/26

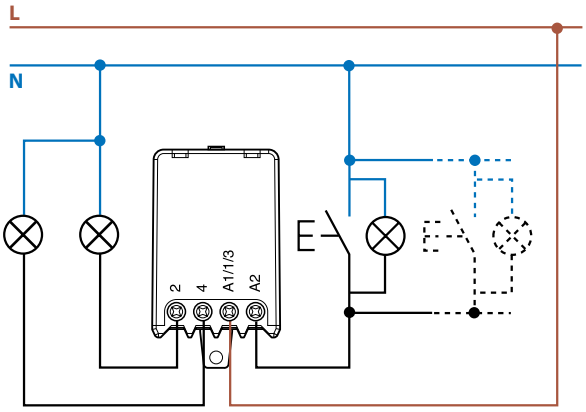

Accessories for types 27.01, 27.05, 27.06

Module for illuminated push-button (230 V AC applications)

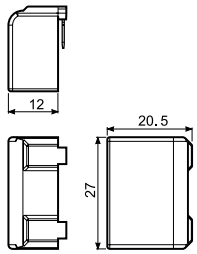

Type 027.00
This module is necessary if using up to a maximum of 24 illuminated push-buttons (1 mA max, 230 V AC) in the switching input circuit.
It must be plugged directly into the relay.

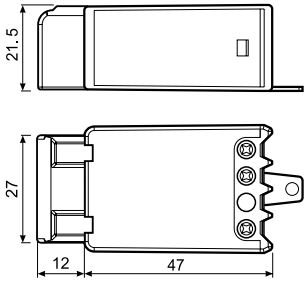

Type 27.0x + 027.00

Outline drawing

Types 27.0x / 2x
Screw terminal

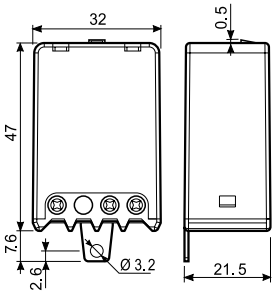

K