finder
RELAYING INNOVATION

Solid State Relays from 5 to 125 A

77
SERIES

- Industrial motors
- Industrial furnaces and ovens
- Lighting control in corridors (for hotels, offices and hospitals)
- Bottling plant
- Labelling machines
- Packaging machines

Finder reserves the right to make changes to its products and their technical specifications at any time and without prior notice, as part of its policy of continuous improvement.
The information contained in this document is provided for indicative purposes only and does not constitute a contractual obligation; errors and omissions excepted.
In the event of any discrepancy between the printed and online versions, the latter, available at findernet.com, shall prevail.

5 A modular SSR, 1 NO AC output

- 17.5 mm housing
- 60 to 240 V AC output (with back to back SCR)
- 5 kV (1.2/50 µs) insulation between Input and Output
- Zero-crossing and random switch-on versions available
- High switching speed
- High endurance
- Silent switching
- Spark and bounce-free switching
- Low control power
- 3-phase general purpose
- 35 mm rail (EN 60715) mount

77.01
Box clamp

* See L77-8 diagram page 20
** See L77-1 and L77-2 diagrams page 19

For outline drawing see page 27

77.01.x.xxx.8050

Zero-crossing switch-on
Suggested applications:

- Lamp inrush current reduction (CFL - Compact Fluorescent energy-saving Lamps and similar)
- Heater control
- Solenoid, contactor driver

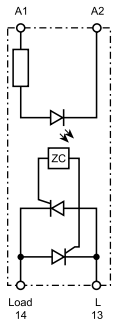

Simplified circuit diagram

77.01.x.xxx.8051

Random switch-on
Suggested applications:

- Finer control requiring short operate time (specially motor control)
- AC Input phase different from AC Output phase

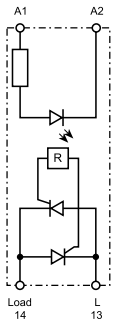

Simplified circuit diagram

		77.01.x.xxx.8050		77.01.x.xxx.8051	
Output specification					
Output configuration		1 NO (SPST-NO)		1 NO (SPST-NO)	
Rated current I_N/Max. peak current* (10 ms)	A	5/300*		5/300*	
Rated voltage	V AC (50/60 Hz)	230		230	
Switching voltage range	V AC (50/60 Hz)	48…265		48…265	
Repetitive peak off-state voltage	V_{pk}	800		800	
Rated load AC7a (cos φ = 0.8)	A	5		5	
Rated load AC15	A	5		3	
Single phase motor rating (230 V AC)	kW	—		0.1	
Nominal lamp rating:					
(230 V) incandescent/halogen	W	1000		800	
fluorescent tubes with electronic ballast	W	1000		800	
fluorescent tubes with electromagnetic ballast	W	1000		800	
CFL	W	800		400	
(230 V) LED	W	800		400	
LV halogen or LED with electronic ballast	W	800		400	
LV halogen or LED with electromagnetic ballast	W	1000		800	
Minimum switching current @ 230 V	mA	100		100	
Typical "OFF-state" leakage current @ 230 V	mA	0.5		3.5	
Max "ON-state" voltage drop @ 25 °C and 5 A/100 mA	V	0.85/1.5		0.85/1.5	
Power loss @ 5 A	W	4		4	
Input specification					
Nominal voltage (U_N)	V AC (50/60 Hz)	—	230	—	230
	V DC	6…24	—	6…24	—
Rated power	VA (50 Hz)/W	—/0.4	3.6/0.3	—/0.4	3.6/0.3
Operating range	V AC (50/60 Hz)	—	90…265	—	90…265
	V DC	4…32	—	4…32	—
Must drop-out voltage	V AC (50/60 Hz)/DC	3	24	3	24
Technical data					
Electrical life	cycles	$10 \cdot 10^6$		$10 \cdot 10^6$	
Operate/release time	ms	20/12		9/8	
Insulation between input and output (1.2/50 µs)	kV	5		5	
Ambient temperature	°C	–20…+70**		–20…+70**	
Protection category		IP 20		IP 20	
Approvals (according to type)		CE UKCA EAC cULus			

7 - 15 A modular SSR, 1 NO DC output

- 17.5 mm housing
- 2 versions, for 24 and 125 V DC mosfet output
- 4 kV (1.2/50 µs) insulation between Input and Output
- Short circuit protection
- High switching speed
- High endurance
- Silent switching
- Spark and bounce-free switching
- Low control power
- 35 mm rail (EN 60715) mount

77.01
Box clamp

* See L77-3 and L77-4 diagrams page 19

For outline drawing see page 27

D

77.01.9.024.9024

24 V DC output switching
15 A rated

Applications in Energy, Automation and Machines:

- Control of electric, pneumatic and hydraulic electromagnetic valves
- Direct control of loads such as motors and electromagnets

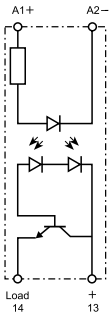

Simplified circuit diagram

77.01.9.024.9125

110…125 V DC output switching
7 A rated

Applications in Energy, Automation and Machines:

- Control of electric, pneumatic and hydraulic electromagnetic valves
- Direct control of loads such as motors and electromagnets

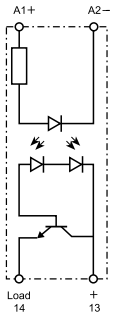

Simplified circuit diagram

		77.01.9.024.9024	77.01.9.024.9125
Output specification			
Output configuration		1 NO (SPST-NO)	1 NO (SPST-NO)
Rated current I_N/Max. peak current (10 ms)	A	15/160	7/60
Rated voltage	V DC	24	125
Switching voltage range	V DC	16…32	43…140
Rated load DC13	A	5	2.5
DC motor rating	kW	0.2	—
Minimum switching current	mA	100	50
Typical "OFF-state" leakage current	mA	3	6
Max "ON-state" voltage drop @ 25 °C and I_N	V	0.06	0.2
Power loss @ I_N	W	1	1.5
Input specification			
Nominal voltage (U_N)	V DC	6…24	6…24
Rated power	W	0.4	0.4
Operating range	V DC	4…32	4…32
Must drop-out voltage	V DC	3	3
Technical data			
Electrical life	cycles	$10 \cdot 10^6$	$10 \cdot 10^6$
Operate/release time	ms	0.05/2	0.05/2
Insulation between input and output (1.2/50 µs)	kV	4	4
Ambient temperature	°C	−20…+70*	−20…+70*
Protection category		IP 20	IP 20
Approvals (according to type)		CE UKCA EAC cULus	

15 A modular SSR, 1 NO output

- 22.5 mm housing, heat-sink + plastic cover
- 24 to 277 V AC output (with TRIAC)
- 6 kV (1.2/50 µs) insulation between Input and Output
- Zero-crossing and random switch-on versions available
- High switching speed
- High endurance
- Silent switching
- Spark and bounce-free switching
- Low control power
- 3-phase general purpose
- "Relay-style" terminal arrangement (input and output terminals on opposite sides)
- 35 mm rail (EN 60715) mount

77.11
Box clamp

* See L77-9 diagram page 20
** See L77-5 diagrams page 19

For outline drawing see page 27

77.11.x.xxx.8250

Zero-crossing switch-on
Suggested applications:

- Lamp inrush current reduction (CFL - Compact Fluorescent energy-saving Lamps and similar)
- Heater control
- Solenoid, contactor driver

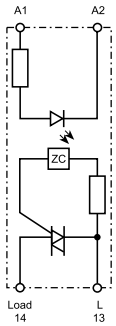

Simplified circuit diagram

77.11.x.xxx.8251

Random switch-on
Suggested applications:

- Fine controls involving shorter time (specially motor control)

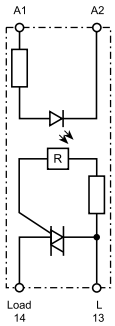

Simplified circuit diagram

Output specification					
Output configuration		1 NO (SPST-NO)		1 NO (SPST-NO)	
Rated current I_N/Max. peak current* (10 ms)	A	15/400*		15/400*	
Rated voltage	V AC (50/60 Hz)	230		230	
Switching voltage range	V AC (50/60 Hz)	19…305		19…305	
Repetitive peak off-state voltage	V_{pk}	800		800	
Rated load AC7a (cos φ = 0.8, @ 25 °C)	A	20		20	
Rated load AC15	A	15		15	
Single phase motor rating (230 V AC)	kW	—		0.75	
Nominal lamp rating: (230 V) incandescent/halogen	W	4000		2500	
fluorescent tubes with electronic ballast	W	4000		2500	
fluorescent tubes with electromagnetic ballast	W	2000		1000	
CFL	W	3000		1500	
(230 V) LED	W	3000		1500	
LV halogen or LED with electronic ballast	W	3000		1500	
LV halogen or LED with electromagnetic ballast	W	3000		1500	
Minimum switching current @ 250 V	mA	100		100	
Typical "OFF-state" leakage current @ 250 V	mA	1		1	
Max "ON-state" voltage drop @ 25 °C and 15 A	V	1.55		1.55	
Power loss @ 15 A	W	14		14	
Input specification					
Nominal voltage (U_N)	V AC (50/60 Hz)	—	230	—	230
	V DC	24	—	24	—
Rated power	VA (50 Hz)/W	0.4	7.5/0.9	0.4	7.5/0.9
Operating range	V AC (50/60 Hz)	—	40…280	—	40…280
	V DC	4…32	—	4…32	—
Must drop-out voltage	V AC (50/60 Hz)/DC	—/2	6/—	—/2	6/—
Technical data					
Electrical life	cycles	$10 \cdot 10^6$		$10 \cdot 10^6$	
Operate/release time	ms	< 10/< 10	< 10/< 30	< 1/< 10	< 2/< 25
Insulation between input and output (1.2/50 µs)	kV	6		6	
Ambient temperature	°C	–20…+80**		–20…+80**	
Protection category		IP 20		IP 20	
Approvals (according to type)		CE UK CA EAC cULus			

25 A modular SSR, 1 NO output

- 22.5 mm housing, heat-sink + plastic cover
- 24 to 277 V AC output (with TRIAC)
- 6 kV (1.2/50 µs) insulation between Input and Output
- Zero-crossing and random switch-on versions available
- High switching speed
- High endurance
- Silent switching
- Spark and bounce-free switching
- Low control power
- 3-phase general purpose
- "Relay-style" terminal arrangement (input and output terminals on opposite sides)
- 35 mm rail (EN 60715) mount

77.21
Box clamp

* See L77-10 diagram page 20
** See L77-6 diagrams page 19

For outline drawing see page 27

D

77.21.x.xxx.8250

Zero-crossing switch-on
Suggested applications:

- Lamp inrush current reduction (CFL - Compact Fluorescent energy-saving Lamps and similar)
- Heater control
- Solenoid, contactor driver

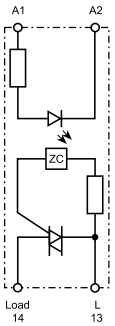

Simplified circuit diagram

77.21.x.xxx.8251

Random switch-on
Suggested applications:

- Finer control requiring short operate time (specially motor control)

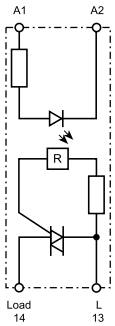

Simplified circuit diagram

		77.21.x.xxx.8250		77.21.x.xxx.8251	
Output specification					
Output configuration		1 NO (SPST-NO)		1 NO (SPST-NO)	
Rated current (@40 °C) I_N/ Max. peak current* (10 ms)	A	25/400*		25/400*	
Rated voltage	V AC (50/60 Hz)	230		230	
Switching voltage range	V AC (50/60 Hz)	19…305		19…305	
Repetitive peak off-state voltage	V_{pk}	800		800	
Rated load AC7a (cos φ = 0.8, @ 25 °C)	A	25		25	
Rated load AC15	A	25		25	
Single phase motor rating (230 V AC)	kW	—		1	
Nominal lamp rating:					
(230 V) incandescent/halogen	W	4000		2500	
fluorescent tubes with electronic ballast	W	4000		2500	
fluorescent tubes with electromagnetic ballast	W	2000		1000	
CFL	W	3000		1500	
(230 V) LED	W	3000		1500	
LV halogen or LED with electronic ballast	W	3000		1500	
LV halogen or LED with electromagnetic ballast	W	3000		1500	
Minimum switching current @ 250 V	mA	100		100	
Typical "OFF-state" leakage current @ 250 V	mA	1		1	
Max "ON-state" voltage drop @ 25 °C and 25 A	V	1.55		1.55	
Power loss @ 25 A	W	14		14	
Input specification					
Nominal voltage (U_N)	V AC (50/60 Hz)	—	230	—	230
	V DC	24	—	24	—
Rated power @ U_{MAX}	VA (50 Hz)/W	0.4	7.5/0.9	0.4	7.5/0.9
Operating range	V AC (50/60 Hz)	—	40…280	—	40…280
	V DC	4…32	—	4…32	—
Must drop-out voltage	V AC (50/60 Hz)/DC	—/2	6/—	—/2	6/—
Technical data					
Electrical life	cycles	$10 \cdot 10^6$		$10 \cdot 10^6$	
Operate/release time	ms	< 10/< 10	< 10/< 30	< 1/< 10	< 2/< 25
Insulation between input and output (1.2/50 µs)	kV	6		6	
Ambient temperature	°C	–20…+80**		–20…+80**	
Protection category		IP 20		IP 20	
Approvals (according to type)		CE UKCA EAC cULus			

IX-2026, www.findernet.com

30 A modular SSR, 1 NO output

- 22.5 mm housing, heat-sink + plastic cover
- 60 to 440 V AC output (with back to back SCR)
- 6 kV (1.2/50 µs) insulation between Input and Output
- Zero-crossing and random switch-on versions available
- High switching speed
- High endurance
- Silent switching
- Spark and bounce-free switching
- Low control power
- 3-phase general purpose
- "Relay-style" terminal arrangement (input and output terminals on opposite sides)
- 35 mm rail (EN 60715) mount

77.31
Box clamp

* See L77-11 diagram page 20
** See L77-7 diagrams page 19

For outline drawing see page 27

77.31.x.xxx.8050

Zero-crossing switch-on
Suggested applications:

- Lamp inrush current reduction (CFL - Compact Fluorescent energy-saving Lamps and similar)
- Heater control
- Solenoid, contactor driver

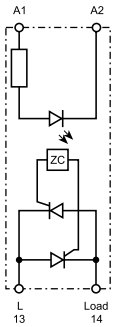

Simplified circuit diagram

77.31.x.xxx.8051

Random switch-on
Suggested applications:

- Finer control requiring short operate time (specially motor control)

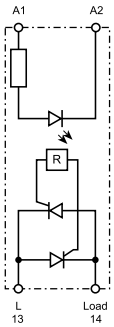

Simplified circuit diagram

Output specification					
Output configuration		1 NO (SPST-NO)		1 NO (SPST-NO)	
Rated current I_N/Max. peak current* (10 ms)	A	30/520*		30/520*	
Rated voltage	V AC (50/60 Hz)	400		400	
Switching voltage range	V AC (50/60 Hz)	48…480		48…480	
Repetitive peak off-state voltage	V_{pk}	1100		1100	
Rated load AC7a (cos φ = 0.8)	A	30		30	
Rated load AC15	A	20		20	
Single phase motor rating (230 V AC)	kW	—		1.5	
Nominal lamp rating: (230 V) incandescent/halogen	W	6000		4500	
fluorescent tubes with electronic ballast	W	6000		4000	
fluorescent tubes with electromagnetic ballast	W	3000		1800	
CFL	W	4000		2500	
(230 V) LED	W	4000		2500	
LV halogen or LED with electronic ballast	W	4000		2500	
LV halogen or LED with electromagnetic ballast	W	4000		2500	
Minimum switching current @ 400 V	mA	300		300	
Typical "OFF-state" leakage current @ 400 V	mA	1		1	
Max "ON-state" voltage drop @ 25 °C and 30 A	V	0.85		0.85	
Power loss @ 30 A	W	16		16	
Input specification					
Nominal voltage (U_N)	V AC (50/60 Hz)	24	230	—	230
	V DC	24	—	24	—
Rated power @ U_{MAX}	VA (50 Hz)/W	0.24/0.4	7.5/0.9	0.4	7.5/0.9
Operating range	V AC (50/60 Hz)	—	40…280	—	40…280
	V DC	4…32	—	4…32	—
Must drop-out voltage	V AC (50/60 Hz)/DC	6/2	6/—	—/2	6/—
Technical data					
Electrical life	cycles	$10 \cdot 10^6$		$10 \cdot 10^6$	
Operate/release time	ms	< 10/< 10	< 10/< 30	< 1/< 10	< 2/< 25
Insulation between input and output (1.2/50 µs)	kV	6		6	
Ambient temperature	°C	–20…+80**		–20…+80**	
Protection category		IP 20		IP 20	
Approvals (according to type)		CE UK CA EAC cULus			

30 A modular SSR, 1 NO output

- 22.5 mm housing, heat-sink + plastic cover
- 60 to 440 V AC output (with back to back SCR)
- 6 kV (1.2/50 µs) insulation between Input and Output
- Zero-crossing and random switch-on versions available
- High switching speed
- High endurance
- Silent switching
- Spark and bounce-free switching
- Low control power
- 3-phase general purpose
- "Contactor-style" terminal arrangement (input and output terminals on adjacent sides)
- 35 mm rail (EN 60715) mount

77.31
Box clamp

* See L77-11 diagram page 20
** See L77-7 diagrams page 19

For outline drawing see page 27

D

77.31.x.xxx.8070

Zero-crossing switch-on
Suggested applications:

- Lamp inrush current reduction (CFL - Compact Fluorescent energy-saving Lamps and similar)
- Heater control
- Solenoid, contactor driver

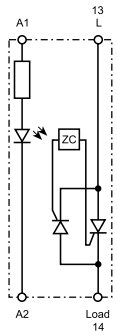

Simplified circuit diagram

77.31.x.xxx.8071

Random switch-on
Suggested applications:

- Fine controls involving shorter time (specially motor control)

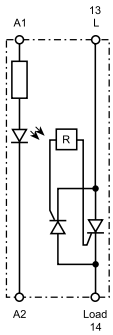

Simplified circuit diagram

		77.31.x.xxx.8070		77.31.x.xxx.8071	
Output specification					
Output configuration		1 NO (SPST-NO)		1 NO (SPST-NO)	
Rated current I_N/Max. peak current* (10 ms)	A	30/520*		30/520*	
Rated voltage	V AC (50/60 Hz)	400		400	
Switching voltage range	V AC (50/60 Hz)	48…480		48…480	
Repetitive peak off-state voltage	V_{pk}	1100		1100	
Rated load AC7a (cos φ = 0.8)	A	30		30	
Rated load AC15	A	20		20	
Single phase motor rating (230 V AC)	kW	—		1.5	
Nominal lamp rating: (230 V) incandescent/halogen	W	6000		4500	
fluorescent tubes with electronic ballast	W	6000		4000	
fluorescent tubes with electromagnetic ballast	W	3000		1800	
CFL	W	4000		2500	
(230 V) LED	W	4000		2500	
LV halogen or LED with electronic ballast	W	4000		2500	
LV halogen or LED with electromagnetic ballast	W	4000		2500	
Minimum switching current @ 400 V	mA	300		300	
Typical "OFF-state" leakage current @ 400 V	mA	1		1	
Max "ON-state" voltage drop @ 25 °C and 30 A	V	0.85		0.85	
Power loss @ 30 A	W	16		16	
Input specification					
Nominal voltage (U_N)	V AC (50/60 Hz)	—	230	—	230
	V DC	24	—	24	—
Rated power	VA (50 Hz)/W	0.4	7.5/0.9	0.4	7.5/0.9
Operating range	V AC (50/60 Hz)	—	40…280	—	40…280
	V DC	4…32	—	4…32	—
Must drop-out voltage	V AC (50/60 Hz)/DC	—/2	6/—	—/2	6/—
Technical data					
Electrical life	cycles	$10 \cdot 10^6$		$10 \cdot 10^6$	
Operate/release time	ms	< 10/< 10	< 10/< 30	< 1/< 10	< 2/< 25
Insulation between input and output (1.2/50 µs)	kV	6		6	
Ambient temperature	°C	–20…+80**		–20…+80**	
Protection category		IP 20		IP 20	
Approvals (according to type)		CE UKCA EAC cULus			

IX-2026, www.findernet.com

25, 40 and 60 A panel Zero-crossing SSR, "hockey puck" style

Type 77.A1.x.xxx.8x50: 25 A

Type 77.B1.x.xxx.8x50: 40 A

Type 77.D1.x.xxx.8x50: 60 A

8250: 24 to 280 VAC switching load voltage

8650: 24 to 660 VAC switching load voltage

- "hockey puck" housing with folding screw cover
- High endurance and switching speed
- Silent switching
- Spark and bounce-free switching
- Low control power
- "Relay-style": input and output terminals on opposite sides
- Mounting on control cabinet sheet metal or on heatsink

77.A1/B1/D1
Screw terminal (plate clamp)*

* See recommendation for wiring page 17

** See L77-13, L77-14 and L77-15 diagrams page 21

Four outline drawing see page 27

77.A1.x.xxx.8x50

Zero-crossing switch-on
- Output: 25 A
- Suggested applications: heater control, lamps, solenoid, contactor driver

77.B1.x.xxx.8x50

Zero-crossing switch-on
- Output: 40 A
- Suggested applications: heater control, lamps, solenoid, contactor driver

77.D1.x.xxx.8x50

Zero-crossing switch-on
- Output: 60 A
- Suggested applications: heater control, lamps, solenoid, contactor driver

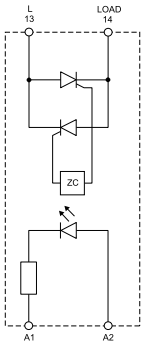

Simplified circuit diagram

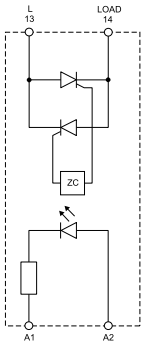

Simplified circuit diagram

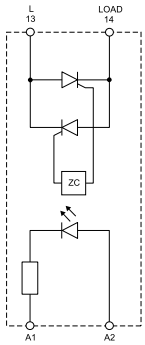

Simplified circuit diagram

Output specification		**77…8250**	**77…8650**	**77…8250**	**77…8650**	**77…8250**	**77…8650**
Output configuration		1 NO		1 NO		1 NO	
Rated current I_N/Max. peak current (10 ms)	A	25/300		40/500		60/700	
Rated voltage	V AC (50/60 Hz)	240	600	240	600	240	600
Switching voltage range	V AC (50/60 Hz)	24…280	24…660	24…280	24…660	24…280	24…660
Operating frequency range	Hz	47…400	47…400	47…400	47…400	47…400	47…400
Repetitive peak off-state voltage	V_{pk}	600	1600	600	1600	600	1600
Rated load AC53	A	5		8		12	
Nominal lamp rating:							
(230 V) incandescent/halogen	W	2000		4000		7200	
fluorescent tubes with electronic ballast	W	2000		4000		7200	
fluorescent tubes with electromagnetic ballast	W	1000		2000		3600	
CFL	W	800		3000		4800	
(230 V) LED	W	800		3000		4800	
LV halogen or LED with electronic ballast	W	800		3000		4800	
LV halogen or LED with electromagnetic ballast	W	1000		3000		4800	
Minimum switching current @ 250 V	mA	100		100		100	
Typical "OFF-state" leakage current @ rated voltage	mA	0.1		0.1		0.1	
Max "ON-state" voltage drop @ 25 °C and I_N	V	1.5		1.5		1.5	
Power loss @ I_N	W	30		48		72	
Input specification							
Nominal voltage (U_N)	V AC (50/60 Hz)	230		230		230	
	V DC	24		24		24	
Rated power @ U_{MAX}	VA (50 Hz)/W	5.3/0.55		5.3/0.55		5.3/0.55	
Operating range	V AC (50/60 Hz)	90…280		90…280		90…280	
	V DC	3…32		3…32		3…32	
Must drop-out voltage	V AC (50/60 Hz)/DC	15/1		15/1		15/1	
Technical data							
Electrical life	cycles	—		—		—	
Operate/release time	(230 V AC) ms	40/20		40/20		40/20	
	(24 V DC) ms	10/10		10/10		10/10	
Insulation between input and output (1.2/50 µs)	kV	—		—		—	
Ambient temperature	°C	–30…+80**		–30…+80**		–30…+80**	
Protection category		IP 20		IP 20		IP 20	
Approvals (according to type)		CE UK CA EAC c UL us					

D

77 SERIES
Hockey puck Solid State Relays 80 - 100 - 125 A

80, 100 and 125 A panel Zero-crossing SSR, "hockey puck" style

Type 77.F1.x.xxx.8x50: 80 A

Type 77.G1.x.xxx.8x50: 100 A

Type 77.H1.x.xxx.8x50: 125 A

8250: 24 to 280 VAC switching load voltage

8650: 24 to 660 VAC switching load voltage

- "hockey puck" housing with folding screw cover
- High endurance and switching speed
- Silent switching
- Spark and bounce-free switching
- Low control power
- "Relay-style": input and output terminals on opposite sides
- Mounting on control cabinet sheet metal or on heatsink

D

77.F1/G1/H1
Screw terminal (plate clamp)*

* See recommendation for wiring page 17

** See L77-16, L77-17 and L77-18 diagrams page 21

For outline drawing see page 27

77.F1.x.xxx.8x50

Zero-crossing switch-on
- Output: 80 A
- Suggested applications: heater control, lamps, solenoid, contactor driver

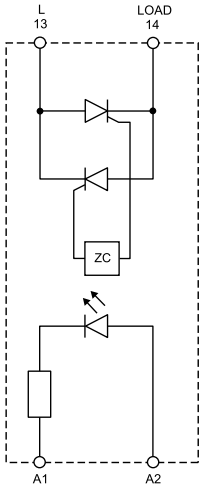

Simplified circuit diagram

77.G1.x.xxx.8x50

Zero-crossing switch-on
- Output: 100 A
- Suggested applications: heater control, lamps, solenoid, contactor driver

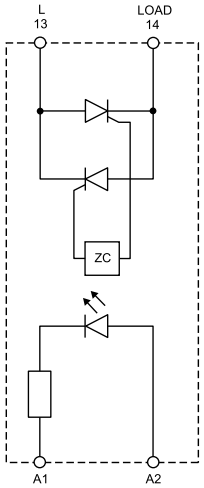

Simplified circuit diagram

77.H1.x.xxx.8x50

Zero-crossing switch-on
- Output: 125 A
- Suggested applications: heater control, lamps, solenoid, contactor driver

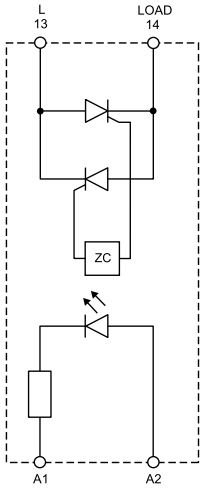

Simplified circuit diagram

Output specification		**77…8250**	**77…8650**	**77…8250**	**77…8650**	**77…8250**	**77…8650**
Output configuration		1 NO		1 NO		1 NO	
Rated current I_N/Max. peak current (10 ms)	A	80/800		100/1500		125/2250	
Rated voltage	V AC (50/60 Hz)	240	600	240	600	240	600
Switching voltage range	V AC (50/60 Hz)	24…280	24…660	24…280	24…660	24…280	24…660
Operating frequency range	Hz	47…400	47…400	47…400	47…400	47…400	47…400
Repetitive peak off-state voltage	V_{pk}	600	1600	600	1600	600	1600
Rated load AC53	A	16		20		25	
Minimum switching current @ 250 V	mA	100		100		100	
Typical "OFF-state" leakage current @ rated voltage	mA	0.1		0.1		0.1	
Max "ON-state" voltage drop @ 25 °C and I_N	V	1.5		1.5		1.5	
Power loss @ I_N	W	96		120		150	
Input specification							
Nominal voltage (U_N)	V AC (50/60 Hz)	230		230		230	
	V DC	24		24		24	
Rated power @ U_{MAX}	VA (50 Hz)/W	5.3/0.55		5.3/0.55		5.3/0.55	
Operating range	V AC (50/60 Hz)	90…280		90…280		90…280	
	V DC	3…32		3…32		3…32	
Must drop-out voltage	V AC (50/60 Hz)/DC	15/1		15/1		15/1	
Technical data							
Electrical life	cycles	—		—		—	
Operate/release time	(230 V AC) ms	40/20		40/20		40/20	
	(24 V DC) ms	10/10		10/10		10/10	
Insulation between input and output (1.2/50 µs)	kV	—		—		—	
Ambient temperature	°C	–30…+80**		–30….+80**		–30…+80**	
Protection category		—		—		—	
Approvals (according to type)		CE UKCA EAC cULus					

IX-2026, www.findernet.com

25, 50 and 75 A dual phase Random SSR, "hockey puck" style with 2 independent channels

Type 77.A2.9.024.8671: 25 A - 600 V AC

Type 77.C2.9.024.8671: 50 A - 600 V AC

Type 77.E2.9.024.8671: 75 A - 600 V AC

- 2 independent output channel driven by independent low power DC input
- "hockey puck" housing with folding screw cover
- High endurance and switching speed
- Silent switching
- Spark and bounce-free switching
- "contactor-style": input and output terminals on adjacent sides
- Mounting on control cabinet sheet metal or on heatsink

77.A2/C2/E2
Screw terminal (plate clamp)*

* See recommendation for wiring page 17

** See L77-19, L77-20 and L77-21 diagrams page 22

For outline drawing see page 27

77.A2.9.024.8671

Random switch-on
- Output: 25 A/600 V AC
- Suggested applications: heater or motor control

77.C2.9.024.8671

Random switch-on
- Output: 50 A/600 V AC
- Suggested applications: heater or motor control

77.E2.9.024.8671

Random switch-on
- Output: 75 A/600 V AC
- Suggested applications: heater or motor control

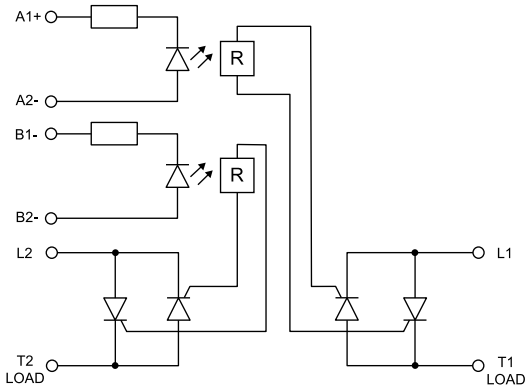

Simplified circuit diagram

Output specification				
Output configuration		2 NO	2 NO	2 NO
Rated current I_N/Max. peak current (10 ms)	A	25/300	50/500	75/750
Rated voltage	V AC (50/60 Hz)	600	600	600
Switching voltage range	V AC (50/60 Hz)	24…660	24…660	24…660
Operating frequency range	Hz	47…400	47…400	47…400
Repetitive peak off-state voltage	V_{pk}	1200	1200	1200
Rated load AC53	A	5	10	15
Minimum switching current @ 600 V	mA	—	—	—
Typical "OFF-state" leakage current @ rated voltage	mA	5	5	5
Max "ON-state" voltage drop @ 25 °C and I_N	V	1.5	1.5	1.5
Power loss @ I_N	W	60	120	180
Input specification				
Nominal voltage (U_N)	V DC	24	24	24
Rated power @ U_{MAX}	W	0.3	0.3	0.3
Operating range	V DC	4…32	4…32	4…32
Must drop-out voltage	V AC (50/60 Hz)/DC	1	1	1
Technical data				
Electrical life	cycles	—	—	—
Operate/release time	ms	1/10	1/10	1/10
Insulation between input and output (1.2/50 µs)	kV	—	—	—
Ambient temperature	°C	–30…+80**	–30…+80**	–30…+80**
Protection category		—	—	—
Approvals (according to type)		CE UKCA EAC cULus		

77 SERIES
Hockey puck Solid State Relays 25 - 40 A

25 and 40 A three phase Random SSR, "hockey puck" style

Type 77.A3.x.xxx.8671: 25 A - 600 V AC

Type 77.B3.x.xxx.8671: 40 A - 600 V AC

- High endurance and switching speed
- Silent switching
- Spark and bounce-free switching
- Low control power
- "contactor-style": input and output terminals on adjacent sides
- Mounting on control cabinet sheet metal or on heatsink

77.A3.x.xxx.8671

Random switch-on
- Output: 25 A/600 V AC
- Suggested applications: heater or motor control

77.B3.x.xxx.8671

Random switch-on
- Output: 40 A/600 V AC
- Suggested applications: heater or motor control

77.A3/B3
Screw terminal (plate clamp)*

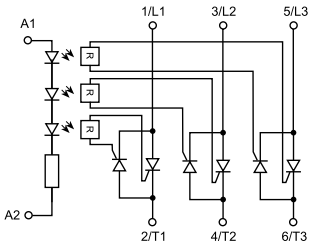

Simplified circuit diagram

* See recommendation for wiring page 17

** See L77-22 and L77-23 diagrams page 22

For outline drawing see page 27

Output specification			
Output configuration		3 NO	3 NO
Rated current I_N/Max. peak current (10 ms)	A	25/300	40/500
Rated voltage	V AC (50/60 Hz)	600	600
Switching voltage range	V AC (50/60 Hz)	24…660	24…660
Operating frequency range	Hz	47…400	47…400
Repetitive peak off-state voltage	V_{pk}	1600	1600
Rated load AC53	A	5	8
Minimum switching current @ 600 V	mA	—	—
Typical "OFF-state" leakage current @ rated voltage	mA	10	10
Max "ON-state" voltage drop @ 25 °C and I_N	V	1.6	1.6
Power loss @ I_N	W	90	144
Input specification			
Nominal voltage (U_N)	V AC (50/60 Hz)	230	230
	V DC	24	24
Rated power @ U_{MAX}	VA (50 Hz)/W	5.3/0.55	5.3/0.55
Operating range	V AC (50/60 Hz)	90…280	90…280
	V DC	4…32	4…32
Must drop-out voltage	V AC (50/60 Hz)/DC	15/1	15/1
Technical data			
Electrical life	cycles	—	—
Operate/release time	(230 V AC) ms	10/20	10/20
	(24 V DC) ms	1	1
Insulation between input and output (1.2/50 µs)	kV	—	—
Ambient temperature	°C	–30…+80**	–30…+80**
Protection category		—	—
Approvals (according to type)		CE UK CA EAC c UL us	

60 and 80 A three phase Random SSR, "hockey puck" style

Type 77.D3.x.xxx.8671: 60 A - 600 V AC

Type 77.F3.x.xxx.8671: 80 A - 600 V AC

- High endurance and switching speed
- Silent switching
- Spark and bounce-free switching
- Low control power
- "contactor-style": input and output terminals on adjacent sides
- Mounting on control cabinet sheet metal or on heatsink

77.D3.x.xxx.8671

Random switch-on

- Output: 60 A/600 V AC
- Suggested applications: heater or motor control

77.F3.x.xxx.8671

Random switch-on

- Output: 80 A/600 V AC
- Suggested applications: heater control

77.D3/F3
Screw terminal (plate clamp)*

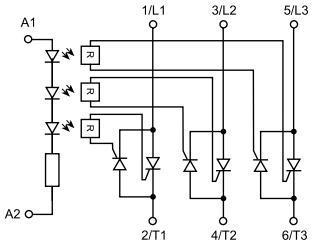

Simplified circuit diagram

* See recommendation for wiring page 17

** See L77-24 and L77-25 diagrams page 22

For outline drawing see page 27

Output specification			
Output configuration		3 NO	3 NO
Rated current I_N/Max. peak current (10 ms)	A	60/700	80/1280
Rated voltage	V AC (50/60 Hz)	600	600
Switching voltage range	V AC (50/60 Hz)	24…660	24…660
Operating frequency range	Hz	47…400	47…400
Repetitive peak off-state voltage	V_{pk}	1600	1600
Rated load AC53	A	12	16
Minimum switching current @ 600 V	mA	—	—
Typical "OFF-state" leakage current @ 600 V	mA	10	10
Max "ON-state" voltage drop @ 25 °C and I_N	V	1.6	1.6
Power loss @ I_N	W	216	288
Input specification			
Nominal voltage (U_N)	V AC (50/60 Hz)	230	230
	V DC	24	24
Rated power @ U_{MAX}	VA (50 Hz)/W	5.3/0.55	5.3/0.55
Operating range	V AC (50/60 Hz)	90…280	90…280
	V DC	4…32	4…32
Must drop-out voltage	V AC (50/60 Hz)/DC	15/1	15/1
Technical data			
Electrical life	cycles	—	—
Operate/release time	(230 V AC) ms	10/20	10/20
	(24 V DC) ms	1	1
Insulation between input and output (1.2/50 µs)	kV	—	—
Ambient temperature	°C	–30…+80**	–30…+80**
Protection category		—	—
Approvals (according to type)		CE UKCA EAC cULus	

Hockey puck SSR heat sink compatibility chart

Heat sink	SSR relay	Thermal pad	K/W	Product Description
NEW 077.21	77.A1	077.T1 077.T2 - Adhesive	2.1	Heat sink SSR 1 phase
NEW 077.13	77.A1 77.B1	077.T1 077.T2 - Adhesive	1.3	Heat sink SSR 1 phase
NEW 077.08 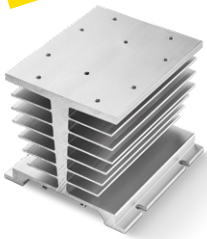	77.B1 - D1 - F1 - G1 - H1 77.A2 - C2 - E2 77.A3 - B3	077.T1 077.T2 - Adhesive 077.T3	0.8	Heat sink SSR 1, 2, 3 phases
NEW 077.03.9.024	77.D1 - F1 - G1 - H1 77.A2 - C2 - E2 77.A3 - B3 - D3 - F3	077.T1 077.T2 - Adhesive 077.T3	0.35	Heat sink with 24 V DC - 5.5 W cooling fan Suitable for SSR 1, 2, 3 phases
NEW 077.03.8.230	77.D1 - F1 - G1 - H1 77.A2 - C2 - E2 77.A3 - B3 - D3 - F3	077.T1 077.T2 - Adhesive 077.T3	0.35	Heat sink with 230 V AC - 14.5 W cooling fan Suitable for SSR 1, 2, 3 phases

D

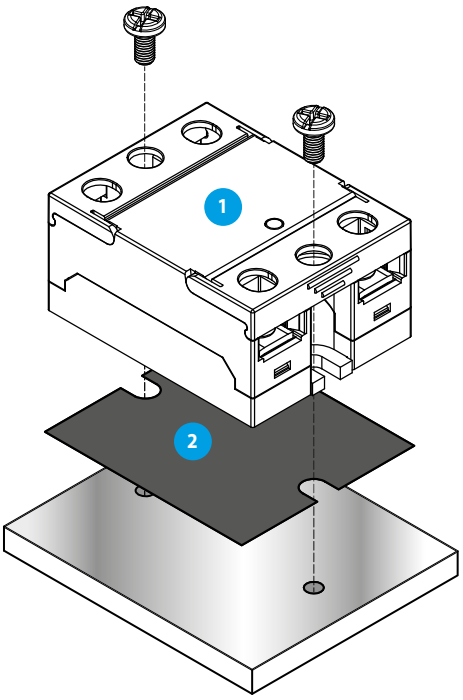

1 Type
77.x1
77.x2

2 Thermal Pad
077.T1
077.T2

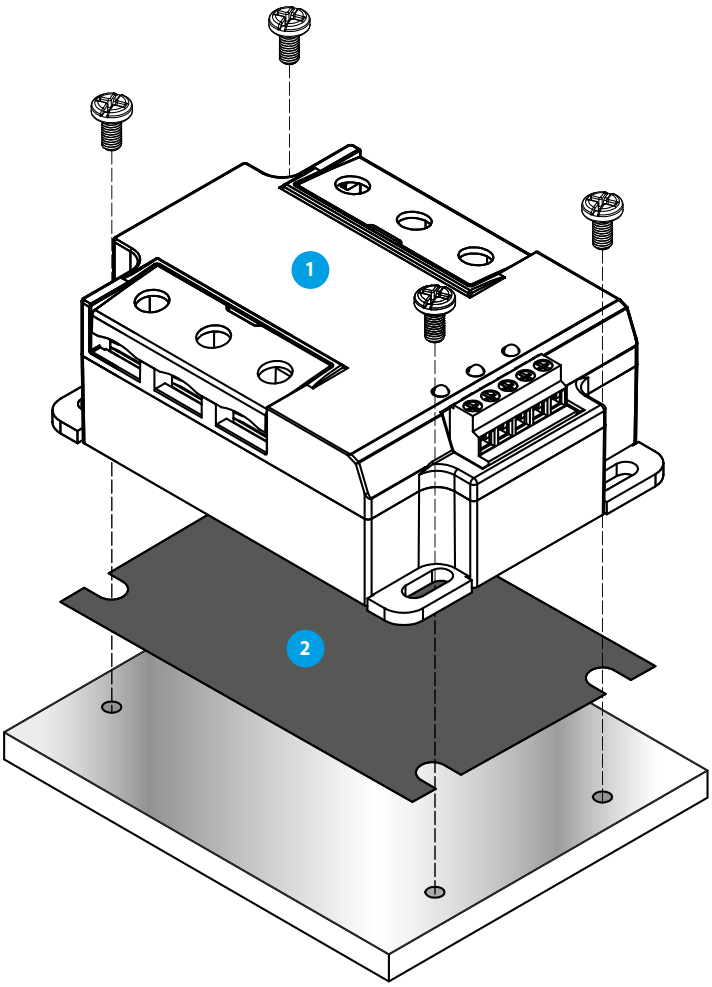

1 Type
77.A3
77.B3
77.D3
77.F3

2 Thermal Pad
077.T3

Ordering information - Modular SSRs

Example: 77 Series modular SSR, 1 output 30 A AC, input voltage 230 V AC, relay style terminal arrangement, zero-crossing switch-on.

7	7	.	3	1	.	8	.	2	3	0	.	8	0	5	0
												A	B	C	D

Series

Type/rated current
0 = 5/7/15 A output (77.01)
1 = 15 A output (77.11)
2 = 25 A output (77.21)
3 = 30 A output (77.31)

No. of poles/mounting
1 = 1 pole, modular housing
(plastic or heat sink/plastic), DIN rail mounting

Input version
8 = AC (50/60 Hz)
9 = DC

Supply voltage
See "input specification"

D: Switch-on mode
0 = Zero-crossing
1 = Random

C: Terminal arrangement
5 = "Relay style" (input and output on opposite sides)
7 = "Contactor style" (input and output on adjacent sides)

AB: Output circuit
(rated voltage)
80 = 230 V AC (77.01), 400 V AC (77.31)
82 = 230 V AC (77.11, 77.21)
9024 = 24 V DC
9125 = 110…125 V DC

Codes/Module width

77.01.8.230.8050/17.5 mm 5 A
77.01.9.024.8050/17.5 mm 5 A
77.01.8.230.8051/17.5 mm 5 A
77.01.9.024.8051/17.5 mm 5 A
77.01.9.024.9125/17.5 mm 7 A
77.01.9.024.9024/17.5 mm 15 A

77.11.8.230.8250/22.5 mm 15 A
77.11.9.024.8250/22.5 mm 15 A
77.11.8.230.8251/22.5 mm 15 A
77.11.9.024.8251/22.5 mm 15 A

77.21.8.230.8250/22.5 mm 25 A
77.21.9.024.8250/22.5 mm 25 A
77.21.8.230.8251/22.5 mm 25 A
77.21.9.024.8251/22.5 mm 25 A

77.31.8.024.8050/22.5 mm 30 A
77.31.8.230.8050/22.5 mm 30 A
77.31.9.024.8050/22.5 mm 30 A
77.31.8.230.8051/22.5 mm 30 A
77.31.9.024.8051/22.5 mm 30 A
77.31.8.230.8070/22.5 mm 30 A
77.31.9.024.8070/22.5 mm 30 A
77.31.8.230.8071/22.5 mm 30 A
77.31.9.024.8071/22.5 mm 30 A

Ordering information - "Hockey puck" style SSRs

Example: 77 Series modular SSR, 1 output 25 A AC, input voltage 230 V AC, relay style terminal arrangement, zero-crossing switch-on.

7	7	.	A	1	.	8	.	2	3	0	.	8	2	5	0
												A	B	C	D

Series

Type/rated current
A = 25 A output
B = 40 A output
C = 50 A output
D = 60 A output
E = 75 A output
F = 80 A output
G = 100 A output
H = 125 A output

No. of poles/mounting
1 = 1 phase, heat-sink or directly panel mounting
("hockey puck")
2 = 2 phases
3 = 3 phases

Input version
8 = AC (50/60 Hz)
9 = DC

Supply voltage
See "input specification"

D: Switch-on mode
0 = Zero-crossing
1 = Random

C: Terminal arrangement
5 = "Relay style" (input and output on opposite sides)
7 = "Contactor style" (input and output on adjacent sides)

AB: Output circuit
(rated voltage)
82 = 230 V AC
86 = 600 V AC

Codes/Module width

1 phase 25 - 40 - 60 - 80 - 100 - 125 A
77.x1.8.230.8250/"hockey puck"
77.x1.9.024.8250/"hockey puck"
77.x1.8.230.8650/"hockey puck"
77.x1.9.024.8650/"hockey puck"

2 phases 25 - 50 - 75 A
77.x2.9.024.8671/"hockey puck"

3 phases 25 - 40 - 60 - 80 A
77.x3.8.230.8671/"hockey puck"
77.x3.9.024.8671/"hockey puck"

Technical data

Insulation		77.01.8xxx		77.01.9xxx		77.11		77.21		77.31	
		Dielectric strength	Impulse (1.2/50 µs)	Dielectric strength	Impulse (1.2/50 µs)	Dielectric strength	Impulse (1.2/50 µs)	Dielectric strength	Impulse (1.2/50 µs)	Dielectric strength	Impulse (1.2/50 µs)
Between input and output		2500 V AC	5 kV	3000 V AC	4 kV	3000 V AC	6 kV	3000 V AC	6 kV	3000 V AC	6 kV
Between input and ground (heat-sink)		—	—	—	—	3000 V AC	6 kV	3000 V AC	6 kV	3000 V AC	6 kV
Between output and ground (heat-sink)		—	—	—	—	2500 V AC	4 kV	2500 V AC	4 kV	4000 V AC	6 kV

EMC specifications		Reference standard	77.01.8.230	77.01.9.024	77.11		77.21		77.31	
			230 V AC	24 V DC	24 V DC	230 V AC	24 V DC	230 V AC	24 V AC/DC	230 V AC
Electrostatic discharge	contact discharge	EN 61000-4-2	4 kV	4 kV	4 kV		4 kV		4 kV	
	air discharge	EN 61000-4-2	8 kV	8 kV	8 kV		8 kV		8 kV	
Radiated electromagnetic field (80…1000 MHz)		EN 61000-4-3	30 V/m	20 V/m	20 V/m		20 V/m		30 V/m	
Fast transients on supply terminals (burst 5/50 ns, 5 and 100 kHz)		EN 61000-4-4	1 kV	1 kV	1 kV	3 kV	1 kV	3 kV	1 kV	3 kV
Voltage pulses on supply terminals (surge 1.2/50 µs)	common mode	EN 61000-4-5	—	—	3 kV	3 kV	3 kV	3 kV	3 kV	3 kV
	differential mode	EN 61000-4-5	1 kV	0.5 kV	0.5 kV	1.5 kV	0.5 kV	1.5 kV	0.5 kV	1.5 kV
Radio-frequency common mode voltage (0.15…230 MHz)	on supply terminals	EN 61000-4-6	10 V	10 V	10 V		10 V		10 V	

Terminals		77.01.x.xxx		77.01.9.xxx		77.11		77.21		77.31	
Screw torque	Nm	0.8		0.8		0.8		0.8		0.8	
Max. wire size		solid cable	stranded cable	solid cable	stranded cable	solid cable	stranded cable	solid cable	stranded cable	solid cable	stranded cable
	mm²	1 x 4 / 2 x 2.5	1 x 4 / 2 x 2.5	1 x 4 / 2 x 2.5	1 x 4 / 2 x 2.5	1 x 6 / 2 x 4	1 x 6 / 2 x 4	1 x 6 / 2 x 4	1 x 6 / 2 x 4	1 x 6 / 2 x 4	1 x 6 / 2 x 4
	AWG	1 x 12 / 2 x 14	1 x 12 / 2 x 14	1 x 12 / 2 x 14	1 x 12 / 2 x 14	1 x 10 / 2 x 12	1 x 10 / 2 x 12	1 x 10 / 2 x 12	1 x 10 / 2 x 12	1 x 10 / 2 x 12	1 x 10 / 2 x 12
Wire strip length	mm	9		9		9		9		9	

Other data						
Power lost to the environment	without output current	W	0.5	0.5	0.9	0.9	0.9
	with rated current	W	4.0	4.0	14	15	16

		77.x1	77.x2	77.x3
		Dielectric strength	Dielectric strength	Dielectric strength
Between Input and output		4 kV	4 kV	4 kV
Between input and ground (heat-sink)		4 kV	2.5 kV	2.5 kV
Terminals				
Screw torque	Input side Nm	1.5	0.5	0.5
	Output side Nm	2.2	2.2	2.2
	On heatsink with thermal pad or paste Nm	2.2	2.2	2.2

Recommendation for wiring

Load current (A)	Cross section area of wire (mm²)	Wire size (AWG)	DIN 46234 terminal model	D1 (mm)	D2 (mm)
15 - 20	2.5	12	4 - 6	4.3	8
			5 - 6	5.3	10
20 - 35	4	10	4 - 6	4.3	8
			5 - 6	5.3	10
25 - 32	6	10	4 - 6	4.3	8
			5 - 6	5.3	10
32 - 50	10	8	5 - 10	5.3	10
50 - 65	16	6	5 - 16	5.3	11
65 - 85	25	4	5 - 25	5.3	12

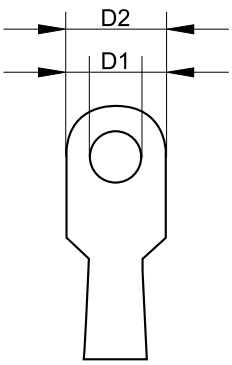

Note: If the wire cross section area is bigger than 25 mm², we suggest to use 2 smaller cross section wires and connect them back to back superimposed (in parallel).

Input specification

77.01

Nominal voltage	Input code	Operating range				Must drop-out voltage	Input current
		AC		DC			
U_N		U_{min}	U_{max}	U_{min}	U_{max}	(AC/DC)	I_N at U_N
V		V	V	V	V	V	mA
24	**9**.024	—	—	4	32	3.0	18
230	**8**.230	90	265	—	—	24	15

77.11/77.21

Nominal voltage	Input code	Operating range				Must drop-out voltage	Input current
		AC		DC			
U_N		U_{min}	U_{max}	U_{min}	U_{max}	(AC/DC)	I_N at U_N
V		V	V	V	V	V	mA
24	**9**.024	—	—	4	32	2	11
230	**8**.230	40	305	—	—	6	25

77.31

Nominal voltage	Input code	Operating range				Must drop-out voltage	Input current
		AC		DC			
U_N		U_{min}	U_{max}	U_{min}	U_{max}	(AC/DC)	I_N at U_N
V		V	V	V	V	V	mA
24	**8**.024	16	32	—	—	6	10
24	**9**.024	—	—	4	32	2	11
230	**8**.230	40	280	—	—	6	25

77.x1.x.xxx.8x50

Nominal voltage	Input code	Operating range				Must drop-out voltage	Input current
		AC		DC			
U_N		U_{min}	U_{max}	U_{min}	U_{max}	(AC/DC)	I_N at U_N
V		V	V	V	V	V	mA
24	**9**.024	—	—	3	32	1.25	25
230	**8**.230	90	280	—	—	1.25	35

77.x2.9.024.8671

Nominal voltage	Input code	Operating range				Must drop-out voltage	Input current
		AC		DC			
U_N		U_{min}	U_{max}	U_{min}	U_{max}	(AC/DC)	I_N at U_N
V		V	V	V	V	V	mA
24	**9**.024	—	—	4	32	1.5	25

77.x3.x.xxx.8671

Nominal voltage	Input code	Operating range				Must drop-out voltage	Input current
		AC		DC			
U_N		U_{min}	U_{max}	U_{min}	U_{max}	(AC/DC)	I_N at U_N
V		V	V	V	V	V	mA
24	**9**.024	—	—	4	32	1.6	35
230	**8**.230	90	280	—	—	1.6	30

Led indication

LED	Supply voltage
	OFF
	ON

LED (77.01.9.024.9xxx only)	Short circuit*
	NO
	YES

* To restore normal operation it is necessary to disconnect the power, resolve the short circuit and then restore power.

D

Output specification

L77-1 Output RMS current v ambient temperature
77.01.9.024.805x @ 32 V DC

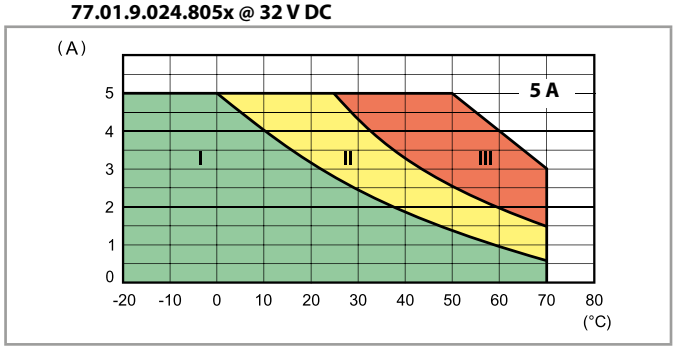

L77-2 Output RMS current v ambient temperature
77.01.8.230.805x @ 265 V AC

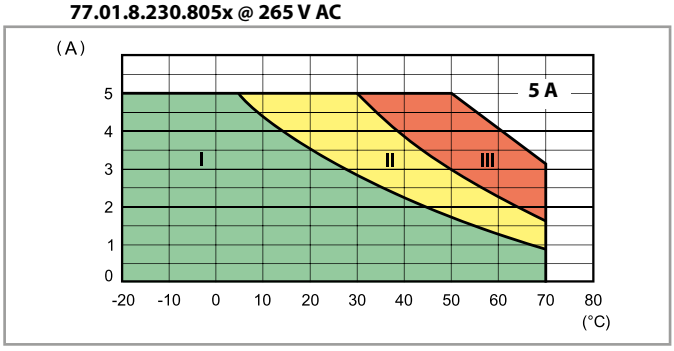

- **I** - Modular SSR installed as a group (without gap)
- **II** - Modular SSR installed as a group (9 mm gap between each SSR)
- **III** - Modular SSR installed individually in free air (without a significant influence from nearby components)

L77-3 Output DC current v ambient temperature
77.01.9.024.9024 @ 32 V DC

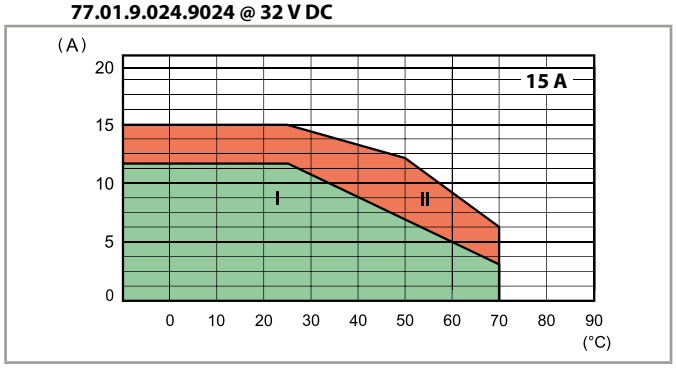

L77-4 Output DC current v ambient temperature
77.01.9.024.9125 @ 32 V DC

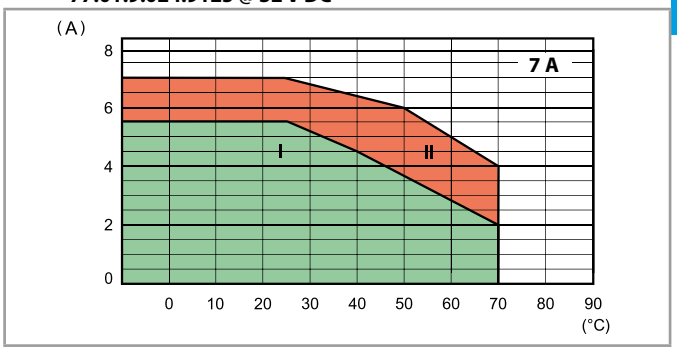

- **I** - Modular SSR installed as a group (without gap)
- **II** - Modular SSR installed individually in free air , or with a gap ≥ 9 mm, which implies a not significant influence from nearby components

L77-5 Output RMS current v ambient temperature
77.11.x.xxx.82xx

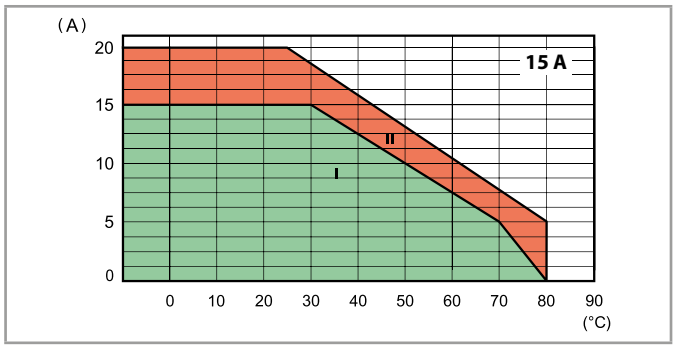

- **I** - Modular SSR installed as a group (without gap)
- **II** - Modular SSR installed individually in free air , or with a gap ≥ 20 mm, which implies a not significant influence from nearby components

L77-6 Output RMS current v ambient temperature
77.21.x.xxx.825x

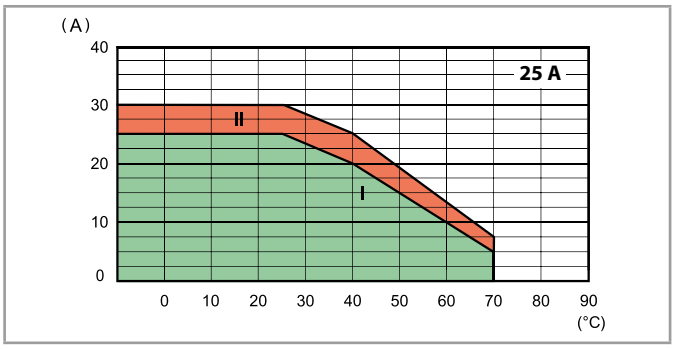

- **I** - Modular SSR installed as a group (without gap)
- **II** - Modular SSR installed individually in free air , or with a gap ≥ 20 mm, which implies a not significant influence from nearby components

L77-7 Output RMS current v ambient temperature
77.31.x.xxx.80xx

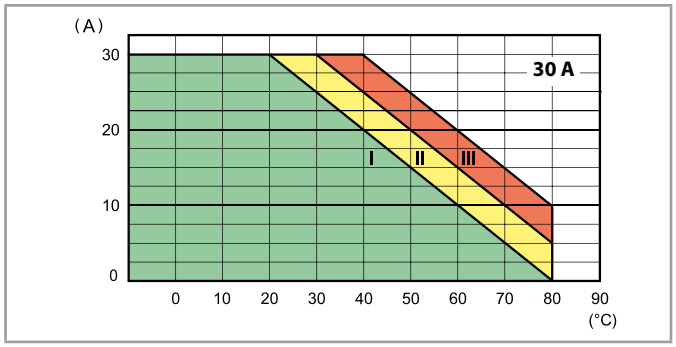

- **I** - Modular SSR installed as a group (without gap)
- **II** - Modular SSR installed as a group (20 mm gap between each SSR)
- **III** - Modular SSR installed individually in free air , or with a gap ≥ 40 mm, which implies a not significant influence from nearby components)

Output specification

L77-8 Inrush peak current (AC) v inrush time
77.01.x.xxx.80xx

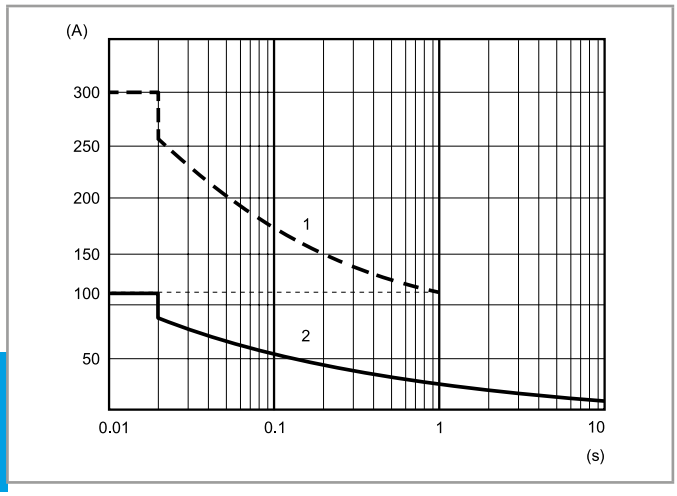

L77-9 Inrush peak current (AC) v inrush time
77.11.x.xxx.82xx

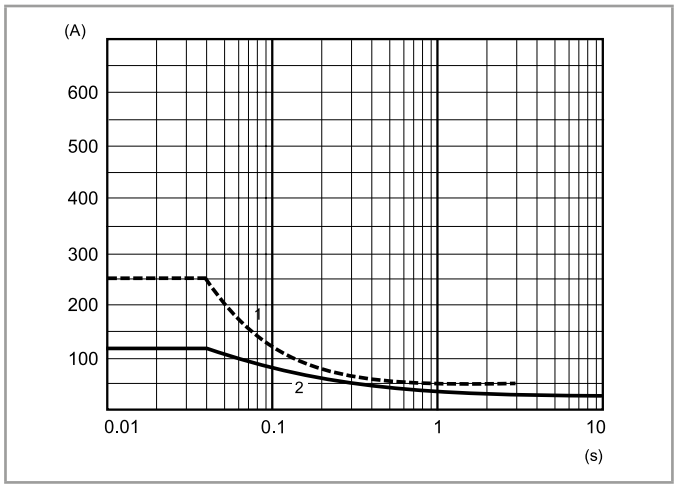

L77-10 Inrush peak current (AC) v inrush time
77.21.x.xxx.825x

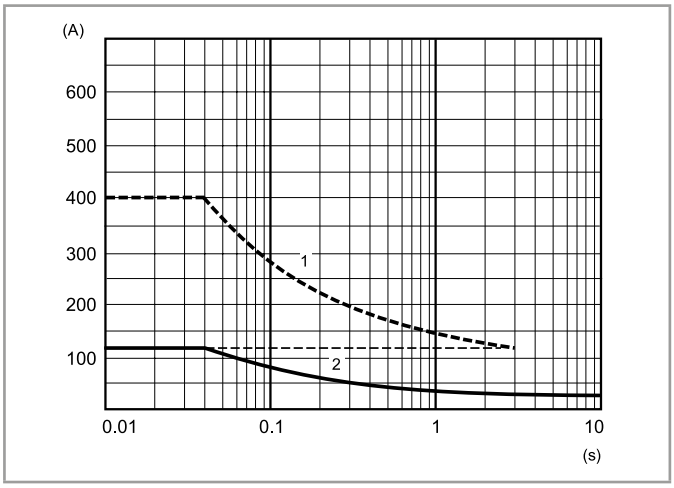

L77-11 Inrush peak current (AC) v inrush time
77.31.x.xxx.80xx

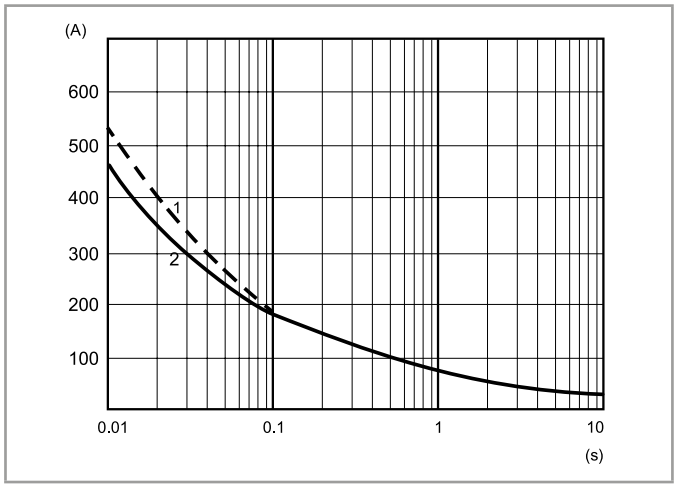

1 - "Cold" conditions (ambient temperature = 23 °C, no output current during the last 15 minutes)
2 - "Hot" conditions (ambient temperature = 50 °C, rated output current)

Output specification

L77-12 Output RMS current v ambient temperature
77.A1.x.xxx.8x50

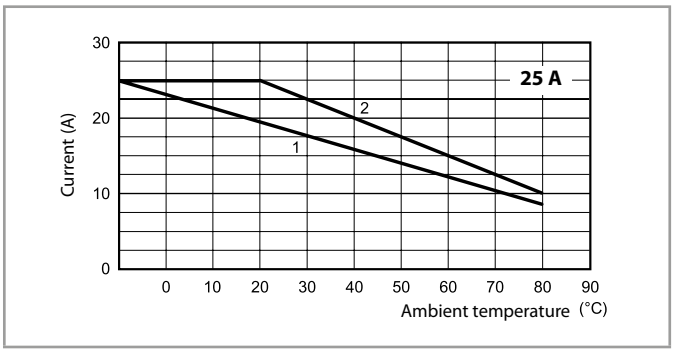

1 - Installation on heat-sink 077.21 (2.1 K/W)
2 - Installation on heat-sink 077.13 (1.3 K/W)

L77-13 Output RMS current v ambient temperature
77.B1.x.xxx.8x50

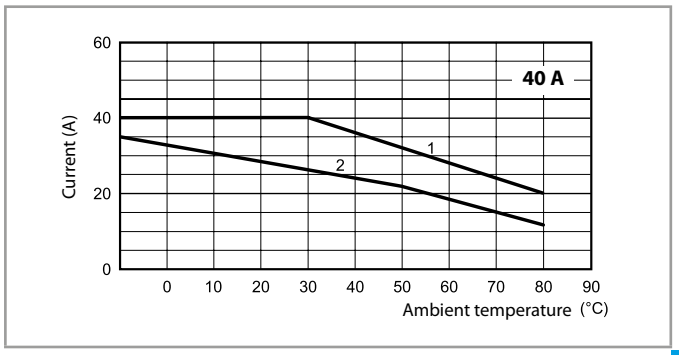

1 - Installation on heat-sink 077.08 (0.8 K/W)
2 - Installation on heat-sink 077.13 (1.3 K/W)

D

L77-14 Output RMS current v ambient temperature
77.D1.x.xxx.8x50

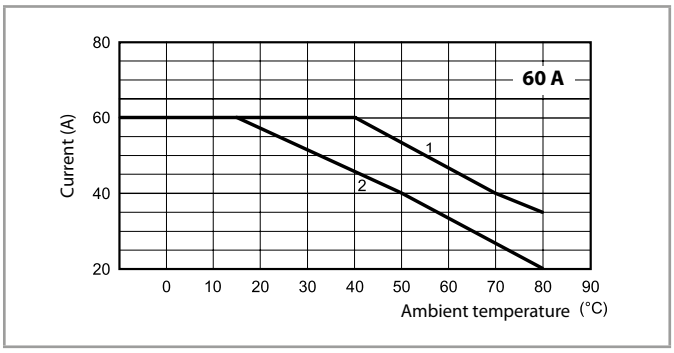

1 - Installation on heat-sink 077.03.x.xxx (0.35 K/W)
2 - Installation on heat-sink 077.08 (0.8 K/W)

L77-15 Output RMS current v ambient temperature
77.F1.x.xxx.8x50

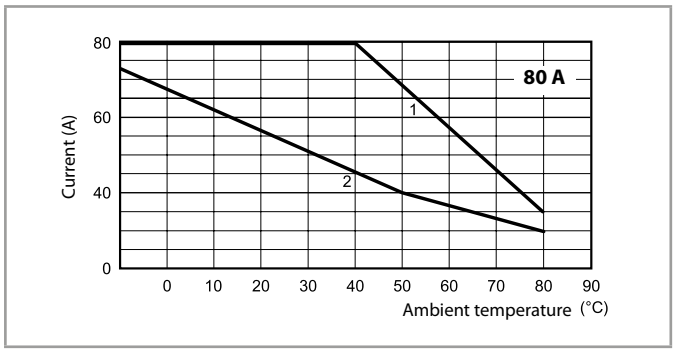

1 - Installation on heat-sink 077.03.x.xxx (0.35 K/W)
2 - Installation on heat-sink 077.08 (0.8 K/W)

L77-16 Output RMS current v ambient temperature
77.G1.x.xxx.8x50

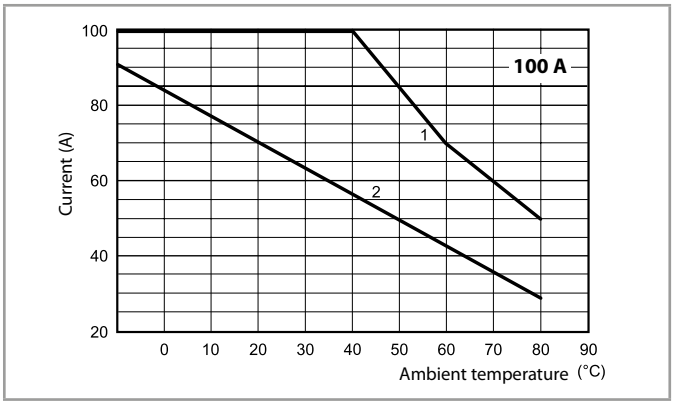

1 - Installation on heat-sink 077.03.x.xxx (0.35 K/W)
2 - Installation on heat-sink 077.08 (0.8 K/W)

L77-17 Output RMS current v ambient temperature
77.H1.x.xxx.8x50

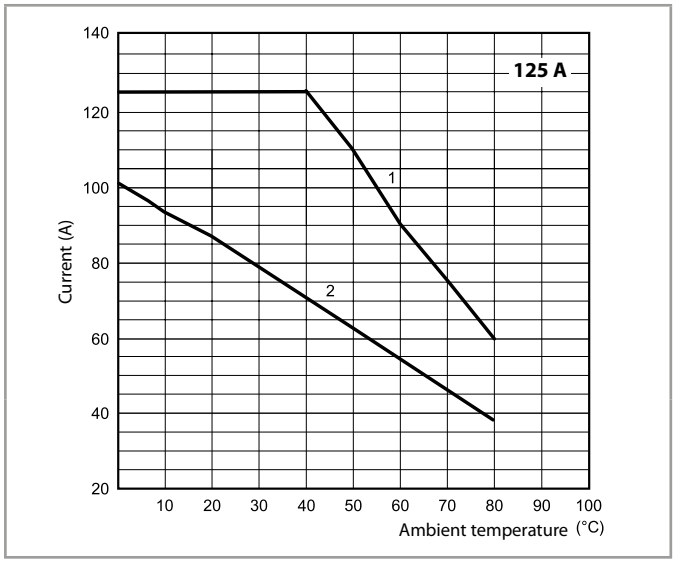

1 - Installation on heat-sink 077.03.x.xxx (0.35 K/W)
2 - Installation on heat-sink 077.08 (0.8 K/W)

Output specification

L77-18 Output RMS current v ambient temperature
77.A2.9.024.8671

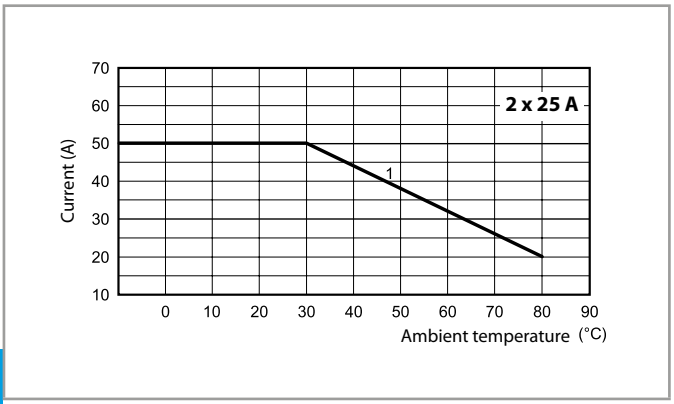

1 - Installation on heat-sink 077.08 (0.8 K/W)

L77-19 Output RMS current v ambient temperature
77.C2.9.024.8671

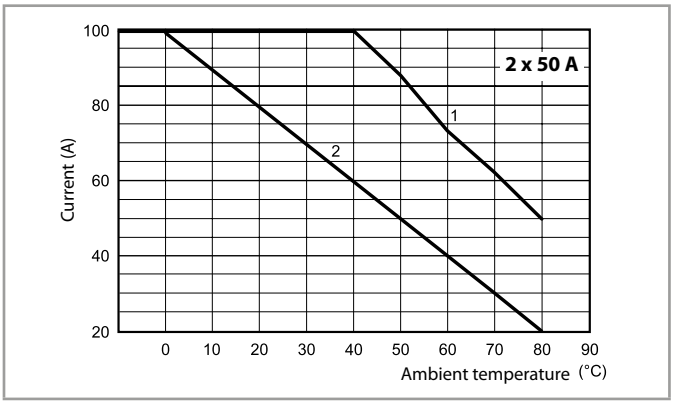

1 - Installation on heat-sink 077.03.x.xxx (0.35 K/W)
2 - Installation on heat-sink 077.08 (0.8 K/W)

L77-20 Output RMS current v ambient temperature
77.E2.9.024.8671

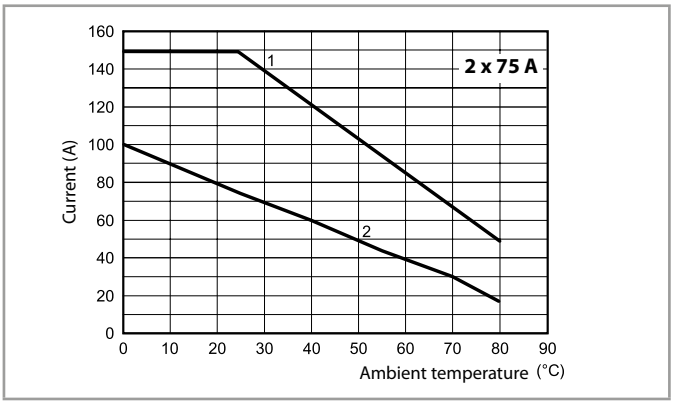

1 - Installation on heat-sink 077.03.x.xxx (0.35 K/W)
2 - Installation on heat-sink 077.08 (0.8 K/W)

L77-21 Output RMS current v ambient temperature
77.A3.x.xxx.8671

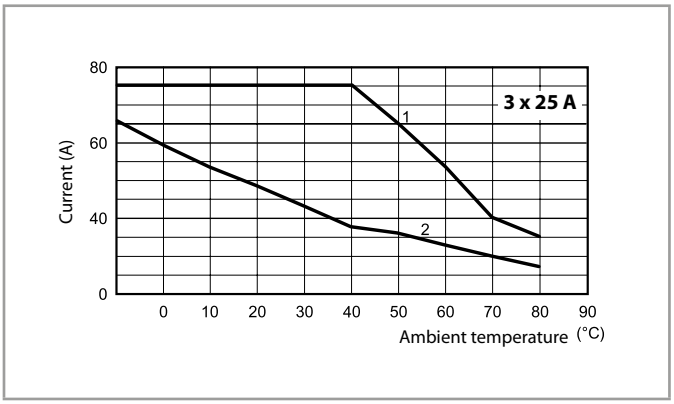

1 - Installation on heat-sink 077.03.x.xxx (0.35 K/W)
2 - Installation on heat-sink 077.08 (0.8 K/W)

L77-22 Output RMS current v ambient temperature
77.B3.x.xxx.8671

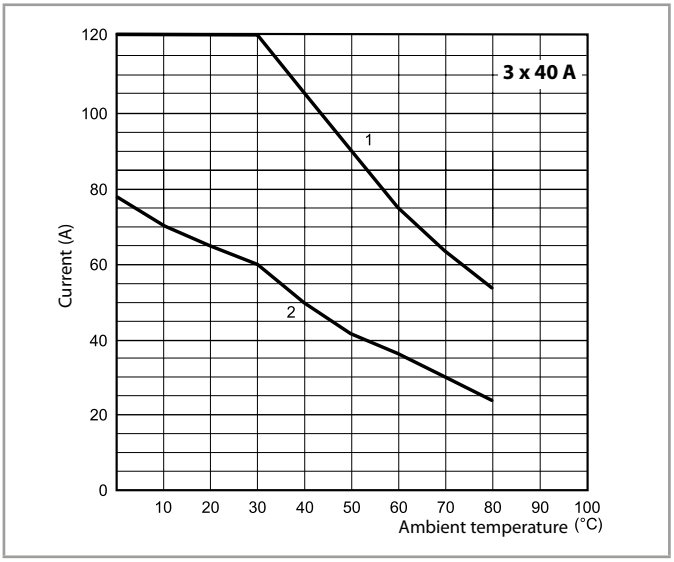

1 - Installation on heat-sink 077.03.x.xxx (0.35 K/W)
2 - Installation on heat-sink 077.08 (0.8 K/W)

L77-23 Output RMS current v ambient temperature
77.D3.x.xxx.8671

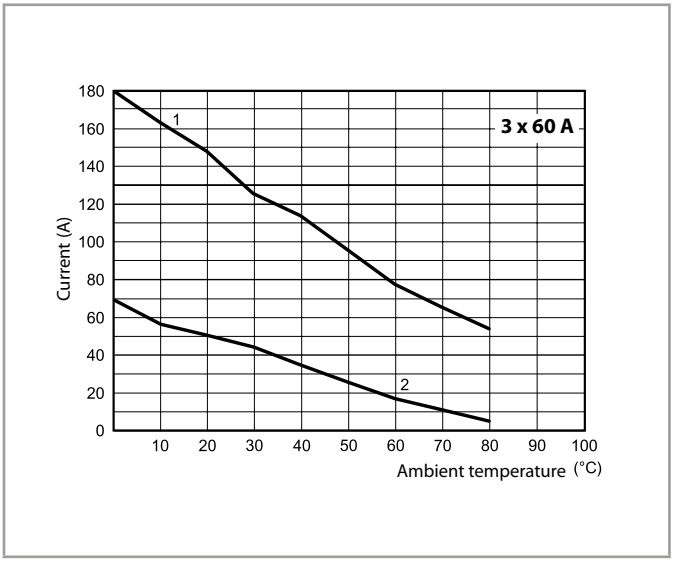

1 - Installation on heat-sink 077.03.x.xxx (0.35 K/W)
2 - Installation on heat-sink 077.08 (0.8 K/W)

Output specification

L77-24 Output RMS current v ambient temperature
77.F3.x.xxx.8671

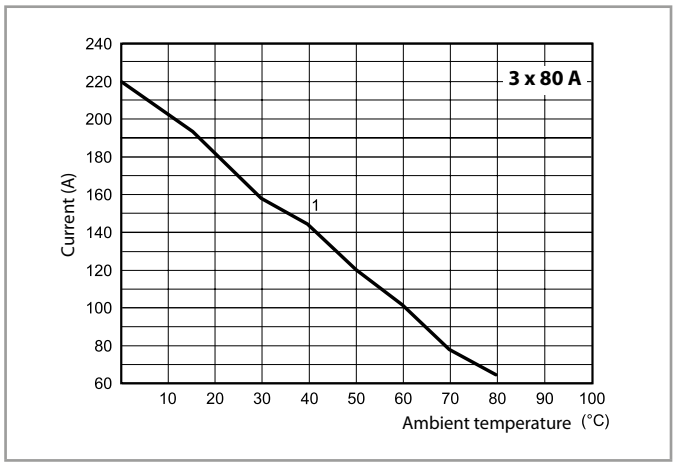

1 - Installation on heat-sink 077.03.x.xxx (0.35 K/W)

L77-25 Output RMS current v ambient temperature
77.F3.x.xxx.8671

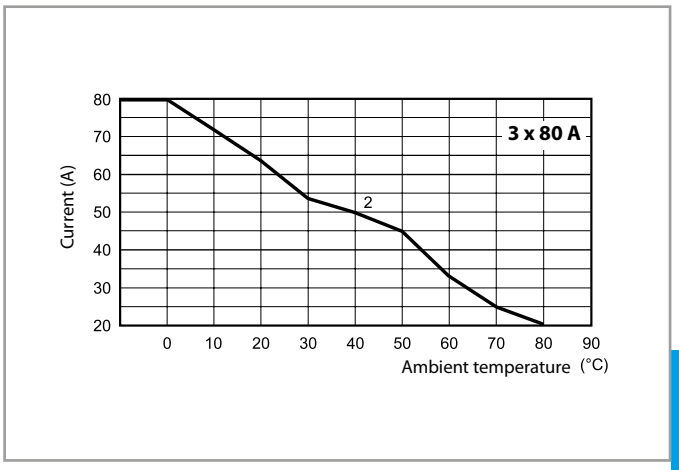

2 - Installation on heat-sink 077.08 (0.8 K/W)

Output specification

Max recommended switching frequency (Cycles/Hour, with 50% Duty-cycle)				
Load	**77.01.x.xxx.805x**	**77.01.9.024.9xxx**	**77.11/21**	**77.31**
5 A 230 V (AC1)	5000	—	—	—
5 A 24 V DC L/R = 20 ms	—	3600	—	—
1 A (AC15)	10 000	—	—	—
0.5 A (AC15)	20 000	—	—	—
15 A 305 V cos φ = 0.8	—	—	1800	—
15 A 305 V cos φ = 0.5	—	—	1200	—
30 A 480 V cos φ = 0.8	—	—	—	1800
30 A 480 V cos φ = 0.5	—	—	—	1200
25 A 230 V cos φ = 0.7	—	—	—	—
40 A 230 V cos φ = 0.7	—	—	—	—
50 A 230 V cos φ = 0.7	—	—	—	—

Other data				
	77.01.x.xxx.805x	**77.01.9.024.9xxx**	**77.11/21**	**77.31**
Critical rising voltage dv/dt without input control (gate open) @ T_j = 125 °C	> 1000 V/µs	> 1000 V/µs	> 500 V/µs > 10 V/µs (with di/dt = 20 A/ms)	> 1000 V/µs
Critical rising current di/dt @ T_j = 125 °C	> 50 A/µs	> 50 A/µs	> 50 A/µs	> 150 A/µs
I^2t for fusing @ t_p = 10 ms	450 A^2s	450 A^2s	1000 A^2s*	1350 A^2s**

Suggested fuse (depending on application) for short-circuit protection (Ultra-Fast acting types for semiconductors):
* 20 A, 660 V AC, 10 x 38 mm, 200 kA, 360 A^2s.
** 30 A, 660 V AC, 10 x 38 mm, 200 kA, 1000 A^2s.

Max recommended switching frequency (Cycles/Hour, with 50% Duty-cycle)						
Load	**77.A1.x.xxx**	**77.B1.x.xxx**	**77.D1.x.xxx**	**77.F1.x.xxx**	**77.G1.x.xxx**	**77.H1.x.xxx**
25 A 230 V cos φ = 0.7	1800	—	—	—	—	—
40 A 230 V cos φ = 0.7	—	1800	—	—	—	—
60 A 230 V cos φ = 0.7	—	—	1800	—	—	—
80 A 230 V cos φ = 0.7	—	—	—	1800	—	—
100 A 230 V cos φ = 0.7	—	—	—	—	1800	—
125 A 230 V cos φ = 0.7	—	—	—	—	—	1800

Other data						
	77.A1.x.xxx	**77.B1.x.xxx**	**77.D1.x.xxx**	**77.F1.x.xxx**	**77.G1.x.xxx**	**77.H1.x.xxx**
Critical rising voltage dv/dt without input control (gate open) @ T_j = 125 °C	500 V/µs	500 V/µs	500 V/µs	500 V/µs	500 V/µs	500 V/µs
I^2t for fusing @ t_p = 10 ms	450 A^2s	1250 A^2s	2450 A^2s*	3200 A^2s**	11 250 A^2s	25 000 A^2s

Max recommended switching frequency (Cycles/Hour, with 50% Duty-cycle)			
Load	**77.A2.x.xxx**	**77.C2.x.xxx**	**77.E2.x.xxx**
25 A 230 V cos φ = 0.7	1800	—	—
50 A 230 V cos φ = 0.7	—	1800	—
75 A 230 V cos φ = 0.7	—	—	1800

Other data			
	77.A2.x.xxx	**77.C2.x.xxx**	**77.E2.x.xxx**
Critical rising voltage dv/dt without input control (gate open) @ T_j = 125 °C	500 V/µs	500 V/µs	500 V/µs
I^2t for fusing @ t_p = 10 ms	450 A^2s	2110 A^2s	2810 A^2s*

Max recommended switching frequency (Cycles/Hour, with 50% Duty-cycle)				
Load	**77.A3.x.xxx**	**77.B3.x.xxx**	**77.D3.x.xxx**	**77.F3.x.xxx**
25 A 230 V cos φ = 0.7	1800	—	—	—
40 A 230 V cos φ = 0.7	—	1800	—	—
60 A 230 V cos φ = 0.7	—	—	1800	—
80 A 230 V cos φ = 0.7	—	—	—	1800

Other data				
	77.A3.x.xxx	**77.B3.x.xxx**	**77.D3.x.xxx**	**77.F3.x.xxx**
Critical rising voltage dv/dt without input control (gate open) @ T_j = 125 °C	500 V/µs	500 V/µs	500 V/µs	500 V/µs
I^2t for fusing @ t_p = 10 ms	450 A^2s	1250 A^2s	2450 A^2s*	8190 A^2s**

Wiring diagrams

Single-phase connection
(77.01…805x)

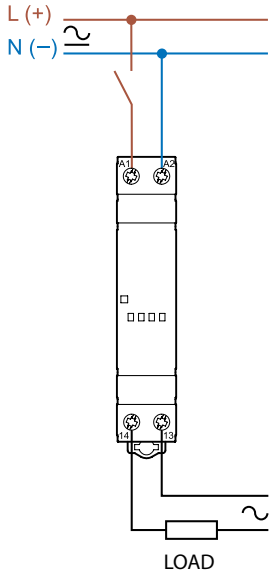

Single-phase connection DC
(77.01…9x2x)

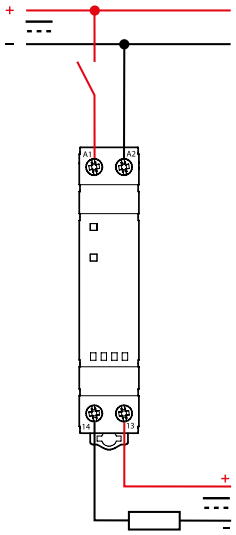

Single-phase connection
(77.11/77.21)

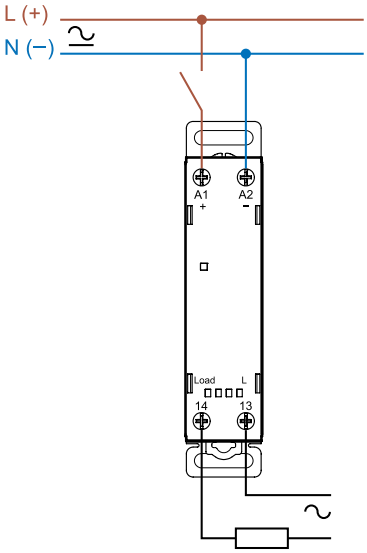

Single-phase connection
(77.31…805x)

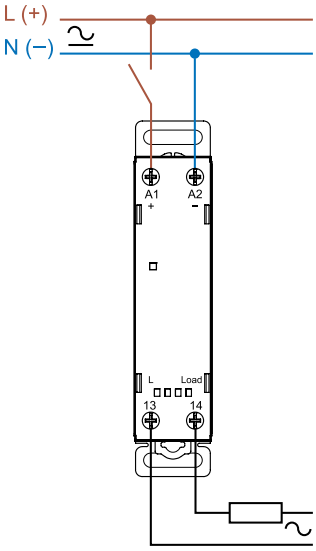

Single-phase connection
(77.31…807x)

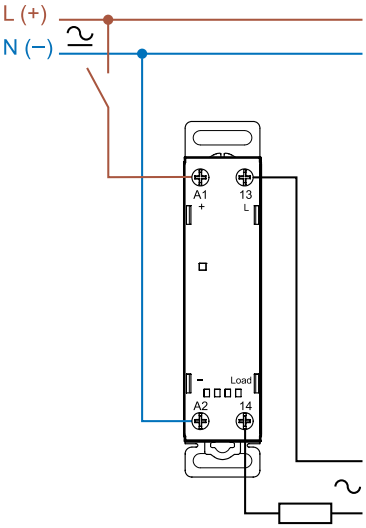

Example of three-phase connection
(with 3 x 77.01)

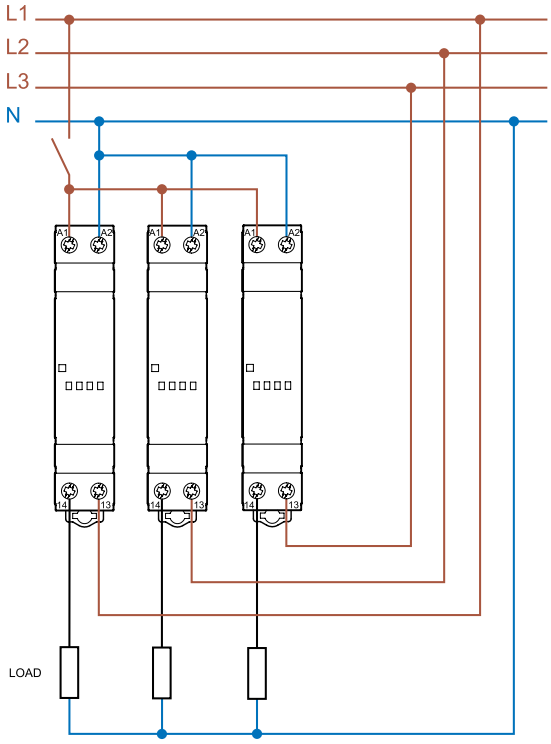

Note: this connection can be used with all 77 series types.

D

Wiring diagrams

Single-phase connection
(77.x1)

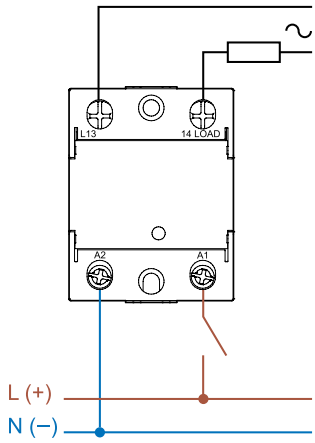

Dual phase connection
(77.x2)

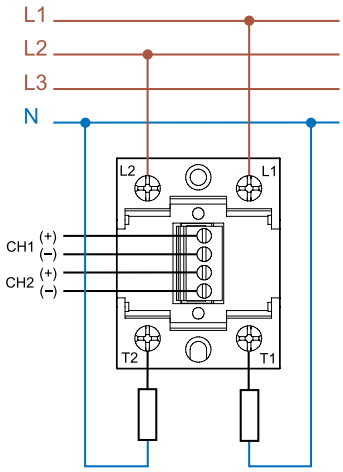

Three phase connection
(77.x3)

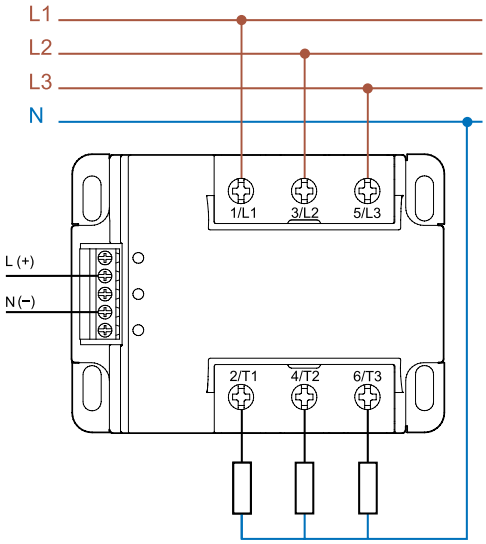

D

Outline drawings

Type 77.01
Box clamp

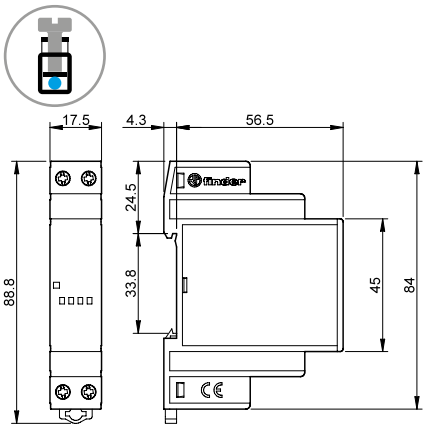

Types 77.11/21/31
Box clamp

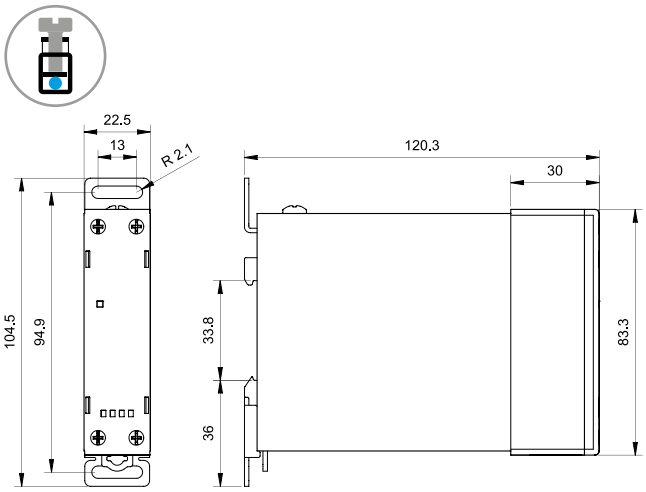

Type 77.01 DC
Box clamp

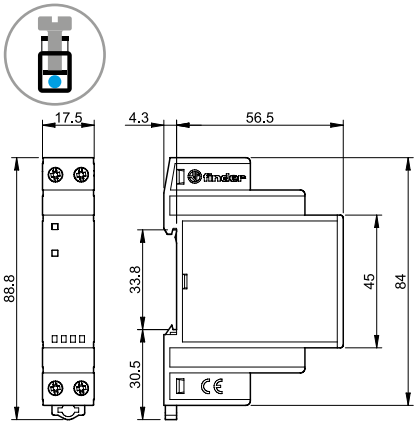

Type 77.x1
Screw terminal (plate clamp)

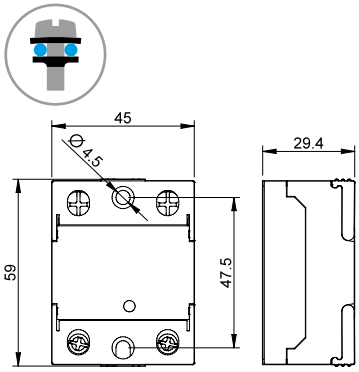

Type 77.x2
Screw terminal (plate clamp)

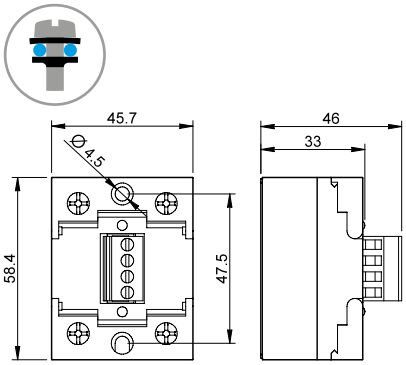

Type 77.x3
Screw terminal (plate clamp)

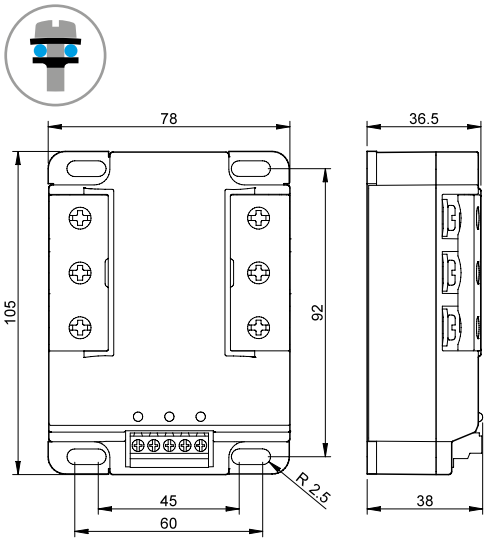

Outline drawings

Type 077.03.x.xxx
Box clamp

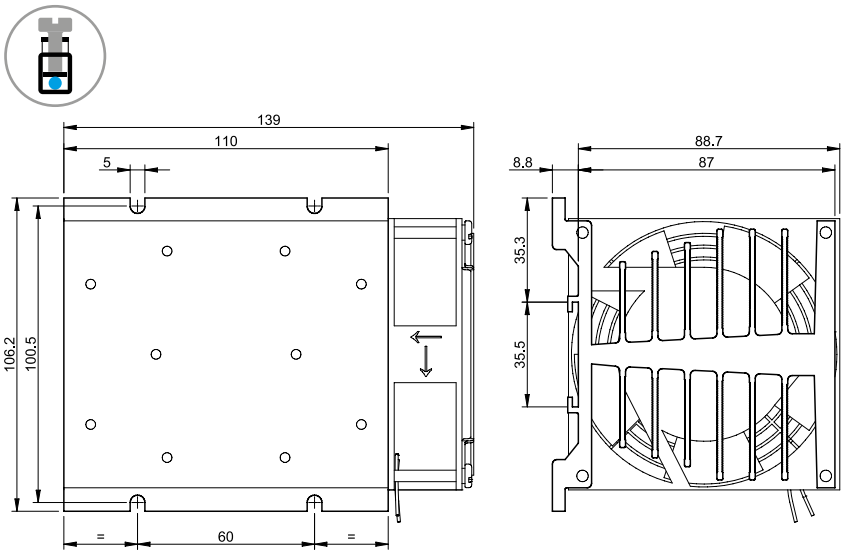

Type 077.08
Box clamp

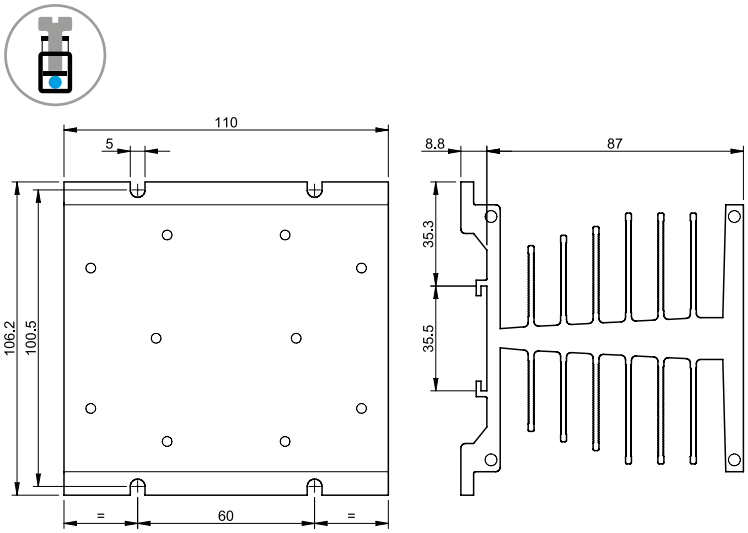

Type 077.13
Box clamp

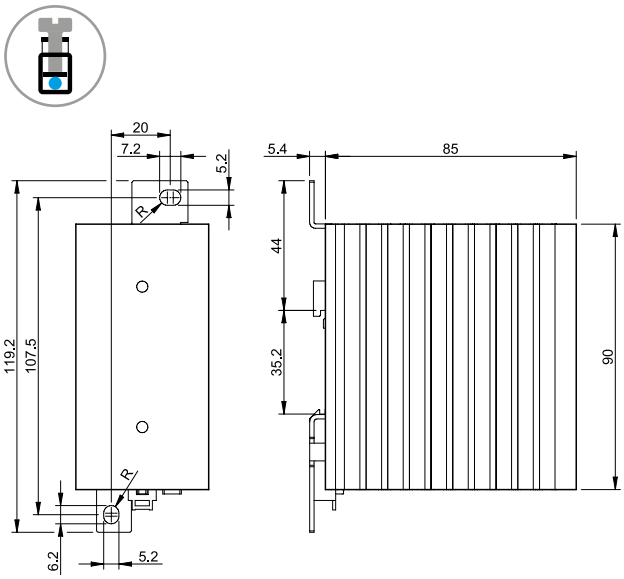

Type 077.21
Box clamp

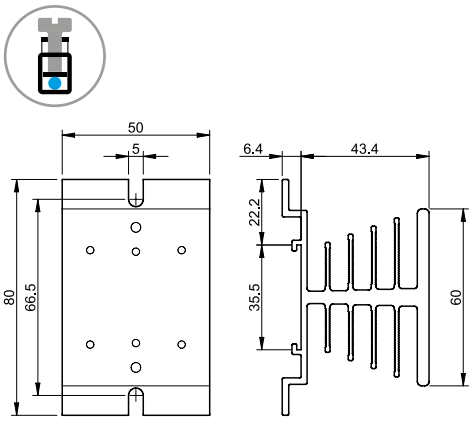

Accessories

020.01

Adaptor for panel mounting, plastic, 17.5 mm wide for 77.01 only	020.01

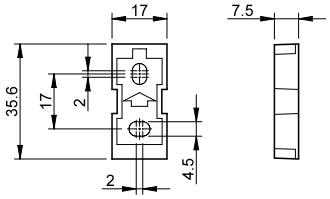

022.09

Separator for rail mounting, plastic, 9 mm wide	022.09

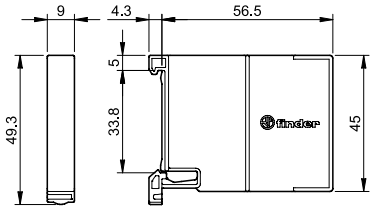

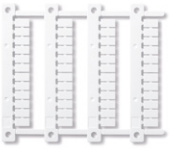

060.48

Sheet of marker tags (CEMBRE Thermal transfer printers) for all relays (48 tags), 6 x 12 mm	060.48

D