Data Sheet | Item Number: 750-103

Group marker carrier

https://www.wago.com/750-103

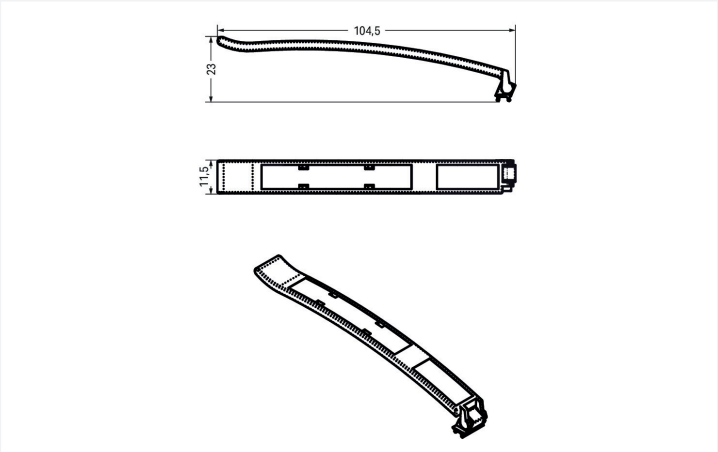

Color: ☐ transparent

Dimensions in mm

The hinged 750-103 Marker Carrier allows group marking of WAGO I/O System 750/753 Series components, while featuring a large area for marking components individually.
The marker carrier can be accommodated in the upper Mini-WSB marker slot.

Technical data	
Suitable	Allows group marking of WAGO I/O System components
Properties	Hinged

Physical data	
Height	23 mm
Width	11.5 mm / 0.453 inches
Depth	104.5 mm / 4.114 inches

Material data	
Color	transparent
Weight	2.8 g
Fire load	0.085 MJ

Commercial data	
Product Group	15 (I/O System)
eCl@ss 10.0	27-14-40-75
eCl@ss 9.0	27-37-12-29
ETIM 8.0	EC002248
ETIM 7.0	EC002248
PU (SPU)	50 pcs
Packaging type	Box
Country of origin	DE
GTIN	4045454769475
Customs tariff number	39269097900

 Continued on next page

Environmental Product Compliance

RoHS Compliance Status	Compliant,No Exemption

Downloads

Environmental Product Compliance

Compliance Search

Environmental Product Compliance 750-103

Documentation

Manual

System Manual WAGO I/O System 750/753	V 3.3.3 29.08.2023	pdf 8512.61 KB	

Bid Text

750-103	19.02.2019	xml 3.02 KB	
750-103	09.01.2019	docx 13.54 KB	

CAD/CAE-Data

CAD data

2D/3D Models 750-103

CAE data

EPLAN Data Portal 750-103

WSCAD Universe 750-103

1 Compatible Products

1.1 Required Accessories

1.1.1 Marking

1.1.1.1 Marker

Item No.: 750-105
Marker card; as a DIN A4 sheet; plain

 Continued on next page

1.2 Optional Accessories

1.2.1 Marking

1.2.1.1 Marking strip

Item No.: 709-178
Marking strips; on reel; 7.5 mm wide; not stretchable; plain; snap-on type; white