Data Sheet | Item Number: 750-8212/025-001

Controller PFC200; 2nd Generation; 2 x ETHERNET, RS-232/-485; Telecontrol technology; Ext. Temperature

https://www.wago.com/750-8212/025-001

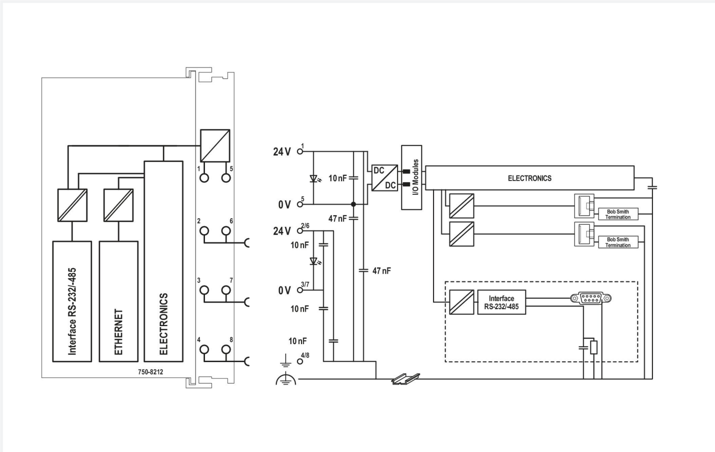

Similar to illustration

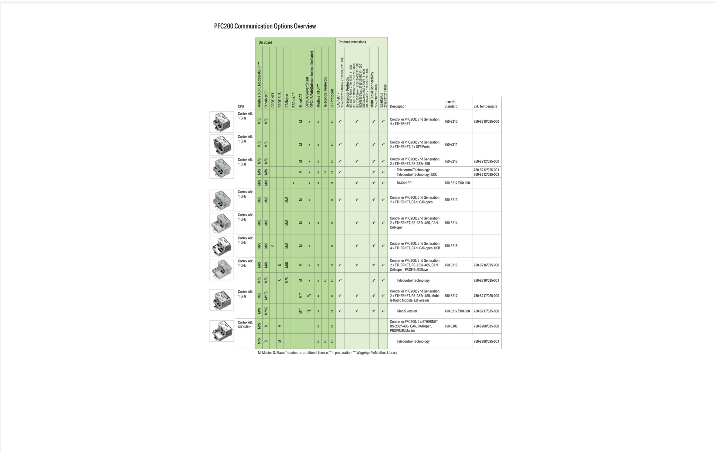

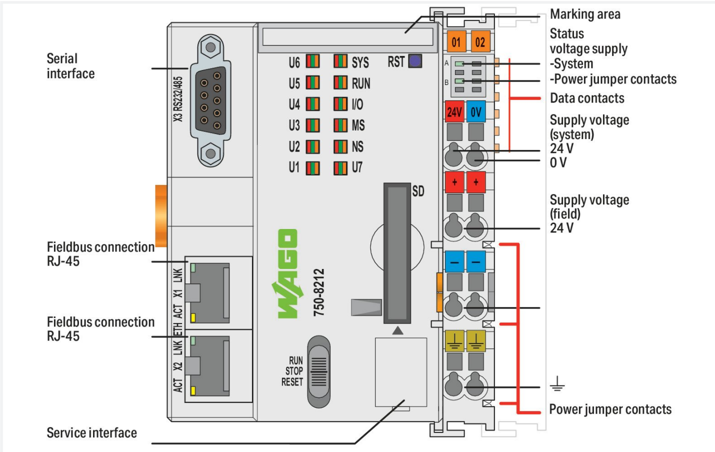

The PFC200 Controller is a compact PLC for the modular WAGO I/O System. Besides network and fieldbus interfaces, the controller supports all digital, analog and specialty modules found within the 750/753 Series.
Two ETHERNET interfaces and an integrated switch enable line topology wiring.
An integrated Webserver provides user configuration options, while displaying PFC200 status information.
Besides the processing industry and building automation, typical applications for the PFC200 include standard machinery and equipment control (e.g., packaging, bottling and manufacturing systems, as well as textile, metal and wood processing machines).
Programming per IEC 61131-3

- Programmable with CODESYS V3.5 from Firmware Release 23, WAGO-I/O-PRO V2.3 or ***e!****COCKPIT* up to Firmware Release 22
- Direct connection of WAGO's I/O modules
- 2 x ETHERNET (configurable), RS-232/-485
- Linux operating system with RT-Preempt patch
- Configuration via CODESYS or Web-Based Management user interface
- Maintenance-free

Technical data

Communication	Modbus TCP master/slave Modbus (UDP), WagoAppPlcModbus Library Modbus (RTU), WagoAppPlcModbus Library ETHERNET EtherNet/IP^{TM} Adapter (slave) EtherNet/IP^{TM} Scanner EtherCAT® Master OPC UA Server/Client OPC UA Pub/Sub (can be installed later) MQTT Telecontrol protocols RS-232 serial interface RS-485 interface BACnet/IP, **requires an additional license**

Continued on next page

Technical data

ETHERNET protocols	DHCP DNS NTP FTP FTPS SNMP HTTP HTTPS SSH
Telecontrol protocols	IEC 60870 IEC 61850 DNP3
Visualization	Web-Visu
Operating system	Real-time Linux (with RT-Preempt patch)
CPU	Cortex A8; 1 GHz
Programming languages per IEC 61131-3	Instruction List (IL) Ladder Diagram (LD) Function Block Diagram (FBD) Continuous Function Chart (CFC) Structured Text (ST) Sequential Function Chart (SFC)
Programming environment	CODESYS V3.5, Firmware Release 23 or higher ***e!****COCKPIT* (based on CODESYS V3) up to Firmware Release 22 WAGO-I/O-*PRO* V2.3 (based on CODESYS V2.3), up to Firmware Release 22
Configuration options	CODESYS V3 ***e!****COCKPIT* WAGO-I/O-*CHECK* Web-Based Management ***e!****RUNTIME* library CODESYS Library
Baud rate (communication/fieldbus 1)	10/100 Mbit/s
Baud rate	ETHERNET: 10/100 Mbit/s
Transmission medium (communication/fieldbus)	ETHERNET: Twisted pair S-UTP; 100 Ω; Cat. 5; 100 m maximum cable length
Main memory (RAM)	512 MB
Internal memory (flash)	4096 MB
Non-volatile hardware memory	128 KB
Program memory	CODESYS V2: 16 MB; CODESYS V3: 32 MB
Data memory	CODESYS V2: 64 MB; CODESYS V3: 128 MB
Non-volatile software memory	128 KB 128 KB
Type of memory card	SD and SDHC up to 32 GB (all guaranteed properties only valid with WAGO's memory card)
Memory card slot	Push-push mechanism; cover lid (sealable)
Number of modules per node (max.)	250
Number of modules without a bus extension (max.)	64
Input and output process image (internal) max.	1000 words/1000 words
Input and output process image (Modbus®) max.	CODESYS V2: 1000 words/1000 words; CODESYS V3: 32000 words/32000 words
Indicators	LED (SYS, RUN, I/O, U1 … U7) red/green/orange: Status of system, program, local data bus, status programmable by user (can be used via CODESYS library); LED (A, B) green: Status of system power supply, field supply
Supply voltage (system)	24 VDC (-25 … +30 %); via pluggable connector (CAGE CLAMP® connection)
Input current (typ.) at nominal load (24 V)	550 mA
Total current (system supply)	1700 mA
Supply voltage (field)	24 VDC (-25 … +30 %); via power jumper contacts
Current carrying capacity (power jumper contacts)	10 A
Number of outgoing power jumper contacts	3
Isolation	500 V system/field

 Continued on next page

Connection data

Connection technology: communication/fieldbus	Modbus (TCP, UDP): 2 x RJ-45; Modbus RTU: 1 x D-sub 9 socket; RS-232 serial interface: 1 x D-sub 9 socket; RS-485 interface: 1 x D-sub 9 socket; Telecontrol protocol IEC 60870-5-101/-103: 1 x D-sub 9 socket; Telecontrol protocol IEC 60870-5-104: 1 x RJ-45; Telecontrol protocol IEC 61850: 1 x RJ-45; Telecontrol protocol DNP3: 1 x RJ-45 or D-sub 9 socket
Connection technology: system supply	2 x CAGE CLAMP®
Connection technology: field supply	6 x CAGE CLAMP®
Connection type 1	System/field supply
Solid conductor	0.08 … 2.5 mm² / 28 … 14 AWG
Fine-stranded conductor	0.08 … 2.5 mm² / 28 … 14 AWG
Strip length	8 … 9 mm / 0.31 … 0.35 inches
Connection technology: device configuration	1 x Male connector; 4-pole

Physical data

Width	78.6 mm / 3.094 inches
Height	100 mm / 3.937 inches
Depth	71.9 mm / 2.831 inches
Depth from upper-edge of DIN-rail	64.7 mm / 2.547 inches

Mechanical data

Weight	219.9 g
Housing material	Polycarbonate; polyamide 6.6
Conformity marking	CE

Environmental requirements

Ambient temperature (operation)	-20 … +60 °C
Ambient temperature (storage)	-40 … +85 °C
Protection type	IP20
Pollution degree	2 per IEC 61131-2
Operating altitude	without temperature derating: 0 … 2000 m; with temperature derating: 2000 … 5000 m (0.5 K/100 m); 5000 m (max.)
Relative humidity (without condensation)	95 %
Relative humidity (with condensation)	Short-term condensation per Class 3K6/IEC EN 60721-3-3 and E-DIN 40046-721-3, accounting for a temperature range of −20 to +60 °C (except for wind-driven precipitation, water and ice formation)
Mounting position	any
Mounting type	DIN-35 rail
Vibration resistance	4g per IEC 60068-2-6
Shock resistance	15g per IEC 60068-2-27
EMC immunity to interference	per EN 61000-6-2, marine applications
EMC emission of interference	per EN 61000-6-3, marine applications
Exposure to pollutants	per IEC 60068-2-42 and IEC 60068-2-43
Fire load	2.549 MJ
Permissible H_2S contaminant concentration at a relative humidity 75 %	10 ppm
Permissible SO_2 contaminant concentration at a relative humidity 75 %	25 ppm

 Continued on next page

Commercial data

eCl@ss 10.0	27-24-26-07
eCl@ss 9.0	27-24-26-07
ETIM 8.0	EC000236
ETIM 7.0	EC000236
PU (SPU)	1 pcs
Packaging type	Box
Country of origin	DE
GTIN	4055143765039
Customs tariff number	85371091990

Environmental Product Compliance

CAS-No.	1303-86-2 1317-36-8 693-98-1 7439-92-1 79-94-7
REACH Candidate List Substance	2,2',6,6'-tetrabromo-4,4'-isopropylidenediphenol 2-methylimidazole Diboron trioxide Lead Lead monoxide Perfluorobutane sulfonic acid (PFBS) and its salts
RoHS Compliance Status	Compliant,With Exemption
RoHS Exemption	6(c) 7(a) 7(c)-I 7(c)-II
SCIP notification number (Austria)	33a73aaa-3201-4f06-bf11-19ff1d613c6c
SCIP notification number (Belgium)	ad51e8bf-8bff-416e-9fd9-bf58b9e4f29f
SCIP notification number (Bulgaria)	9efc58d2-6aea-42ed-afa2-939b3a738c15
SCIP notification number (Czech Republic)	3a2ecf12-f45f-4520-9110-0a38a306cd58
SCIP notification number (Denmark)	1c60bcb4-90e6-469a-a9d7-30bd8dcf0241
SCIP notification number (Finland)	c5959470-afaf-422a-bdec-4264d90597ad
SCIP notification number (France)	c71b33d6-8387-47da-90f6-0a07fa0fba67
SCIP notification number (Germany)	4778bbee-f0f1-41c1-8b6f-8eed1c41bc04
SCIP notification number (Hungary)	edffc353-2aa2-4da6-98b1-b080da267f9e
SCIP notification number (Italy)	109688a1-c73e-46f6-aeed-f59a90198b0c
SCIP notification number (Netherlands)	783469d9-425a-42b7-8ce6-2fbe5f1c9dd5
SCIP notification number (Poland)	94d3e0b7-a9d7-4c14-bf25-49f60cc7c600
SCIP notification number (Romania)	23b512ed-7085-4085-8f9b-42710238e5d5
SCIP notification number (Sweden)	35bf4daf-3cb3-4da9-8183-ecf33f4468d9

Approvals / Certificates

General approvals

Approval	Standard	Certificate Name
EAC GZO Almaty Standart	TP TC 020/2011	EAC CoC 03083
KC National Radio Research Agency	Article 58-2, Clause 3	MSIP-REM-W43-PFC750
UL Underwriters Laboratories Inc. (ORDINARY LOCATIONS)	-	E175199

Declarations of conformity and manufacturer's declarations

Approval	Standard	Certificate Name
EU-Declaration of Conformity WAGO GmbH & Co. KG	-	-
UK-Declaration of Conformity WAGO GmbH & Co. KG	-	-

 Continued on next page

Approvals for marine applications

Approval	Standard	Certificate Name
ABS American Bureau of Shipping	-	22-2227356-PDA
BSH Bundesamt fuer Seeschifffahrt und Hydrographie	-	1104
DNV DNV Germany GmbH	IEC 60870-5-104 ed.2	10322241-INC 22-2700
DNV DNV Germany GmbH	DNV-CG-0339,Aug.2021	TAA00001J4
PRS Polski Rejestr Statków	-	TE/1102/880590/23

Approvals for hazardous areas

Approval	Standard	Certificate Name
ATEX TUEV Nord Cert GmbH	EN 60079-0	TUEV14ATEX148929X (II 3 G Ex ec IIC T4 Gc)
CCCEx CQST/CNEx	CNCA-C23-01	2020312310000213 (Ex ec IIC T4 Gc)
IECEx TUEV Nord Cert GmbH	IEC 60079-0	IECEx TUN 14.0035 X (Ex ec IIC T4 Gc)
INMETRO TÜV Rheinland do Brasil Ltda.	IEC 60079-0	TÜV 12.1297 X
UKEx WAGO GmbH & Co. KG	EN 60079-0	UKCA_WAGO22UKEX003X_ec
UL Underwriters Laboratories Inc. (HAZARDOUS LOCATIONS)	UL 121201	E198726 Sec.1

Downloads

Environmental Product Compliance

Compliance Search
Environmental Product Compliance 750-8212/025-001

Documentation

Manual			
Cyber Security for Controller PFC100 / PFC200	V 1.2.0	pdf 8128.80 KB	
Product Manual PFC200 G2 2ETH RS	1.13.0 / FW 26 27.11.2023	pdf 4944.08 KB	
Product Manual Configure IEC 61850	V 1.4.0 20.07.2023	pdf 6642.16 KB	
Product Manual Configure IEC 60870	V 1.3.0 20.07.2023	pdf 8754.70 KB	
System Manual Series 750/753			
Product Manual OPC UA Mapping Editor	V 1.1.0 11.03.2022	pdf 3314.23 KB	
OPC_UA Mapping Editor			
Product Manual WAGO MODBUS Master Configurator	V 1.1.0	pdf 1761.59 KB	
Product Manual Configure DNP3	V 1.3.0 20.07.2023	pdf 7466.95 KB	
Migration Guide	V 1.3.0 03.07.2023	pdf 4938.74 KB	
Migrationsleitfaden von e!COCKPIT-Projekten zu CODESYS V3.5			

System Description		
Overview on WAGO-I/O-SYSTEM 750 approvals	pdf 770.48 KB	
Controller PFC100/200, General Product Information	pdf 578.66 KB	

 Continued on next page

Tutorial			
WAGO IEC 61850 solution (Transformer)	1.0 01.06.2012	wmv 19483.43 KB	
Establish connection to a controller using SSH	1.0 05.08.2017	mp4 28368.02 KB	
Set IP address with Ethernet Settings	3.0 18.12.2017	mp4 86272.82 KB	
Tutorial WAGO IEC 61850 / 61400 solution	1.0 01.06.2012	wmv 44339.58 KB	
WAGO IEC 61400-25 solution (Windmill)	1.0 01.06.2012	wmv 19878.48 KB	

Additional Information			
WAGO OPC UA Server	V 1.1.0 28.01.2021	pdf 1132.87 KB	

Bid Text			
750-8212/025-001	19.02.2019	xml 9.76 KB	
750-8212/025-001	21.11.2018	docx 22.08 KB	

Instruction Leaflet			
CCC Ex (Additional information)	26.04.2023	pdf 159.76 KB	

Application Notes

Application Note CoDeSys 2.3			
Application note for installing a MySQL-Server on a PFC-Controller	1.0.4 16.05.2019	zip 4392.22 KB	
Application note Cloud Connectivity	2019-09-17 17.09.2019	zip 3973.74 KB	
HART Tool Routing via ETHERNET with 750-820x/750-88x and CODESYS 2.3 (a116120)	1.0.0 22.03.2019	pdf 3798.36 KB	
Using the web visualization with Java™ runtime environment (JRE, JVM) 7 update 51 (7u51) (a500690)	1.2.4 26.02.2019	zip 4896.43 KB	
Application Note PowerMeasurement_03 Library	19.01.2011 19.03.2012	zip 932.08 KB	
Application Note: DMX_02	26.04.2017 26.04.2017	zip 733.43 KB	
HVAC System Macros	10.03.2017 15.03.2019	zip 13252.92 KB	
Application Note: MpBus_03 Library	2020-08-14 14.08.2020	zip 513.66 KB	
Connection of a Thermokon Thanos SR L MODBUS room control unit to the WAGO-I/O-SYSTEM	02.05.2013 13.05.2013	zip 305.89 KB	
Anbindung der HKW-Elektronik Wetterprognose-Station WS-K xx T ModBus	1.1 07.07.2017	zip 762.78 KB	
Application Note Scheduler_03.lib	20.05.2011 20.05.2011	zip 1717.92 KB	
Application Note Connecting with an iPod Touch	30.03.2011 28.10.2011	zip 428.79 KB	

Application Note CoDeSys 2.3			
GRUNDFOS GENIbus interface, application note	20.03.2017 20.03.2017	zip 279.86 KB	
Connection of Thermokon Multi-function room control units WRF 08	10.04.2019 10.04.2019	zip 855.84 KB	
Connection of DMX devices to the WAGO-I/O-SYSTEM via the ArtNet-DMX STAGE-PROFI 1.1	11.01.2013 11.01.2013	zip 1450.63 KB	
Connection of Thermokon Multi-function room control units WRF 06	10.04.2019 08.04.2016	zip 826.10 KB	
Application Note for the 750-494 3-Phase Power Measurement Module	24.01.2014 11.11.2014	zip 1629.99 KB	
Application Note: EnOcean_06 Library	30.11.2016 30.11.2016	zip 822.25 KB	
Application Note for the 750-495 3-Phase Power Measurement Module	24.01.2014 24.01.2014	zip 1806.18 KB	
Application Note Library WagoDatalogger_02	2020-05-20 20.05.2020	zip 1256.74 KB	
Application Note Weather Station Elsner P03 Modbus	01.12.2011 28.10.2011	zip 269.09 KB	
Application note: DALI 753-647 Configuration Interface	1.0.2 29.04.2019	zip 3032.71 KB	
HLK-Anlagenmakros für TRIC	2015-07-10 10.07.2015	zip 74963.43 KB	
Application Note Library ModuleAccess_01	05.01.2016 29.01.2016	zip 1001.22 KB	
Anwendungshinweis für die Steuerung eines Igus robolink	12.11.2015 12.11.2015	zip 1281.38 KB	

 Continued on next page

Application Note e!COCKPIT

eCOCKPIT application note installation MyS-QL-Server	1.0.3 09.09.2019	pdf 1868.46 KB	
e!COCKPIT application note WagoAppCloud	2022-11-04 04.11.2022	zip 2678.52 KB	
HART Tool Routing via ETHERNET with 750-820x and e!RUNTI-ME (a116130)	1.0.0 22.03.2019	pdf 2867.01 KB	
SNMP Communication (a500850)	1.1.0 20.02.2020	zip 3743.05 KB	
e!COCKPIT Application Note WagoAppPower-PlantControl (a2019015)	2021-12-06 06.12.2021	zip 2174.02 KB	
e!COCKPIT Anwen-dungshinweis WagoAp-pRTU_Slaves	1.0.1 06.12.2021	pdf 759.01 KB	
e!COCKPIT Anwen-dungshinweis HVAC BACnet Macros (a2021010)	1.3.0 27.02.2023	zip 67588.63 KB	
e!COCKPIT Application Note OPC UA Client (a2022001)	1.0.0 05.04.2022	zip 1336.65 KB	
Application Note WAGO Visualization Datalog-ger (a2022005)	20240109 09.01.2024	zip 3851.08 KB	

Application note, other

		pdf 2174.17 KB	

CAD/CAE-Data

CAD data

2D/3D Models 750-8212/025-001	

CAE data

EPLAN Data Portal 750-8212/025-001	
ZUKEN Portal 750-8212/025-001	

Engineering-Software

Configuration and Commissioning Software

WAGO-IO-PRO Demo-Version (759-912) / Se-rie 750, 758 und 762	V 2.3.9.68 17.02.2022	zip 122524.17 KB	
(759-316) WAGO Ether-net Settings / Serie 750	06.18.01.01 02.09.2021	zip 26678.54 KB	
WAGOupload	1.16.1.0 02.02.2022	zip 12111.45 KB	

 Continued on next page

Runtime Software

Firmware			
Image Update (SD Karte) PFC100/200 für Codesys V2.3 u. E!cockpit	V 22 SP1 12.12.2022	zip 205815.20 KB	
PFC200, Firmware Update für CoDeSys V3.5	V 23 24.02.2023	zip 167985.38 KB	
WUP Update (WAGOuploadTool) PFC100/200 Codesys V2.3 u. E!cockpit	V 22 SP1 12.12.2022	zip 203580.70 KB	

Libraries

Library			
WagoConfigToolLIB	1.0.0 08.10.2013	pdf 340.92 KB	
WagoLibLed	1.0.0	pdf 504.39 KB	
Library WagoLibCloud_02.lib	2.2.4 21.01.2020	zip 56.21 KB	
WAGO_Datalogger_02.lib	2.7 20.05.2020	zip 662.90 KB	

1 Compatible Products

1.1 Optional Accessories

1.1.1 Cables and connectors

1.1.1.1 Connector plug

Item No.: 750-979/000-011
Connector ETHERNET; RJ-45; Cat. 6A; angled; Code T568A; AWG 22; Strain relief

Item No.: 750-979/000-021
Connector ETHERNET; RJ-45; Cat. 6A; angled; Code T568A; AWG 24; Strain relief

Item No.: 750-979/000-012
Connector ETHERNET; RJ-45; Cat. 6A; angled; Code T568B; AWG 22; Strain relief

Item No.: 750-979/000-022
Connector ETHERNET; RJ-45; Cat. 6A; angled; Code T568B; AWG 24; Strain relief

Item No.: 750-977/000-011
Connector ETHERNET; RJ-45; Cat. 6A; straight; Code T568A; AWG 22

Item No.: 750-978/000-011
Connector ETHERNET; RJ-45; Cat. 6A; straight; Code T568A; AWG 22; Strain relief

Item No.: 750-977/000-021
Connector ETHERNET; RJ-45; Cat. 6A; straight; Code T568A; AWG 24

Item No.: 750-978/000-021
Connector ETHERNET; RJ-45; Cat. 6A; straight; Code T568A; AWG 24; Strain relief

Item No.: 750-977/000-012
Connector ETHERNET; RJ-45; Cat. 6A; straight; Code T568B; AWG 22

Item No.: 750-978/000-012
Connector ETHERNET; RJ-45; Cat. 6A; straight; Code T568B; AWG 22; Strain relief

Item No.: 750-977/000-022
Connector ETHERNET; RJ-45; Cat. 6A; straight; Code T568B; AWG 24

Item No.: 750-978/000-022
Connector ETHERNET; RJ-45; Cat. 6A; straight; Code T568B; AWG 24; Strain relief

Item No.: 750-975
ETHERNET RJ-45 connector, IP20; ETHERNET 10/100 Mbit/s; for field assembly

 Continued on next page

1.1.2 Communication

1.1.2.1 Communication cable

Item No.: 750-923
Configuration cable; USB connector; Length: 2.5 m

Item No.: 750-923/000-001
Configuration cable; USB connector; Length: 5 m

1.1.3 DIN-rail

1.1.3.1 Mounting accessories

Item No.: 210-196
Aluminum carrier rail; 35 x 8.2 mm; 1.6 mm thick; 2 m long; unslotted; similar to EN 60715; silver-colored

Item No.: 210-198
Copper carrier rail; 35 x 15 mm; 2.3 mm thick; 2 m long; unslotted; according to EN 60715; copper-colored

Item No.: 210-508
Steel carrier rail; 35 x 15 mm; 1.5 mm thick; 2 m long; slotted; galvanized; similar to EN 60715; silver-colored

Item No.: 210-197
Steel carrier rail; 35 x 15 mm; 1.5 mm thick; 2 m long; slotted; similar to EN 60715; silver-colored

Item No.: 210-506
Steel carrier rail; 35 x 15 mm; 1.5 mm thick; 2 m long; unslotted; galvanized; similar to EN 60715; silver-colored

Item No.: 210-114
Steel carrier rail; 35 x 15 mm; 1.5 mm thick; 2 m long; unslotted; similar to EN 60715; silver-colored

Item No.: 210-118
Steel carrier rail; 35 x 15 mm; 2.3 mm thick; 2 m long; unslotted; according to EN 60715; silver-colored

Item No.: 210-115
Steel carrier rail; 35 x 7.5 mm; 1 mm thick; 2 m long; slotted; according to EN 60715; "Hole width 18 mm; silver-colored

Item No.: 210-112
Steel carrier rail; 35 x 7.5 mm; 1 mm thick; 2 m long; slotted; according to EN 60715; "Hole width 25 mm; silver-colored

Item No.: 210-504
Steel carrier rail; 35 x 7.5 mm; 1 mm thick; 2 m long; slotted; galvanized; according to EN 60715; silver-colored

Item No.: 210-113
Steel carrier rail; 35 x 7.5 mm; 1 mm thick; 2 m long; unslotted; according to EN 60715; silver-colored

Item No.: 210-505
Steel carrier rail; 35 x 7.5 mm; 1 mm thick; 2 m long; unslotted; galvanized; according to EN 60715; silver-colored

1.1.4 Marking

1.1.4.1 Group marker carrier

Item No.: 750-107
Group marker carrier

1.1.4.2 Marker

Item No.: 2009-145/000-006
Mini-WSB Inline; for Smart Printer; 1700 pieces on roll; stretchable 5 - 5.2 mm; plain; snap-on type; blue

Item No.: 2009-145/000-007
Mini-WSB Inline; for Smart Printer; 1700 pieces on roll; stretchable 5 - 5.2 mm; plain; snap-on type; gray

Item No.: 2009-145/000-023
Mini-WSB Inline; for Smart Printer; 1700 pieces on roll; stretchable 5 - 5.2 mm; plain; snap-on type; green

Item No.: 2009-145/000-012
Mini-WSB Inline; for Smart Printer; 1700 pieces on roll; stretchable 5 - 5.2 mm; plain; snap-on type; orange

Item No.: 2009-145/000-005
Mini-WSB Inline; for Smart Printer; 1700 pieces on roll; stretchable 5 - 5.2 mm; plain; snap-on type; red

Item No.: 2009-145/000-024
Mini-WSB Inline; for Smart Printer; 1700 pieces on roll; stretchable 5 - 5.2 mm; plain; snap-on type; violet

Item No.: 2009-145
Mini-WSB Inline; for Smart Printer; 1700 pieces on roll; stretchable 5 - 5.2 mm; plain; snap-on type; white

Item No.: 2009-145/000-002
Mini-WSB Inline; for Smart Printer; 1700 pieces on roll; stretchable 5 - 5.2 mm; plain; snap-on type; yellow

Item No.: 248-501/000-006
Mini-WSB marking card; as card; not stretchable; plain; snap-on type; blue

Item No.: 248-501/000-007
Mini-WSB marking card; as card; not stretchable; plain; snap-on type; gray

Item No.: 248-501/000-023
Mini-WSB marking card; as card; not stretchable; plain; snap-on type; green

Item No.: 248-501/000-017
Mini-WSB marking card; as card; not stretchable; plain; snap-on type; light green

 Continued on next page

1.1.4.2 Marker

Item No.: 248-501/000-012
Mini-WSB marking card; as card; not stretchable; plain; snap-on type; orange

Item No.: 248-501/000-005
Mini-WSB marking card; as card; not stretchable; plain; snap-on type; red

Item No.: 248-501/000-024
Mini-WSB marking card; as card; not stretchable; plain; snap-on type; violet

Item No.: 248-501
Mini-WSB marking card; as card; not stretchable; plain; snap-on type; white

Item No.: 248-501/000-002
Mini-WSB marking card; as card; not stretchable; plain; snap-on type; yellow

1.1.4.3 Marker carrier

Item No.: 750-103
Group marker carrier

1.1.5 Memory card

1.1.5.1 Memory card

Item No.: 758-879/000-2108
Memory Card SD; pSLC-NAND; 8 GB; Temperature range: -40 to 90°C

Item No.: 758-879/000-001
Memory Card SD; SLC-NAND; 2 GByte; Temperature from -40 to 90 °C

1.1.6 Shield termination

1.1.6.1 Shield clamping saddles

Item No.: 790-108
Shield clamping saddle; 11 mm wide; diameter of compatible conductor; 3 ... 8 mm

Item No.: 790-208
Shield clamping saddle; 12.4 mm wide; 3 ... 8 mm

Item No.: 790-116
Shield clamping saddle; 19 mm wide; diameter of compatible conductor; 7 ... 16 mm

Item No.: 790-216
Shield clamping saddle; 21.8 mm wide; 6 ... 16 mm

Item No.: 790-124
Shield clamping saddle; 27 mm wide; diameter of compatible conductor; 6 ... 24 mm

Item No.: 790-220
Shield clamping saddle; 30 mm wide; 6 ... 20 mm

Item No.: 790-140
Shield clamping saddle; diameter of compatible conductor

1.1.7 Software

1.1.7.1 Basic version

Item No.: 759-333
WAGO-I/O-PRO

Item No.: 759-333/000-923
WAGO-I/O-PRO; USB-Set

 Continued on next page

1.1.7.2 Runtime software

Item No.: 2759-244/210-1000
Runtime; Room Automation; Macro; Single License

1.1.7.3 Software Application

Item No.: 2759-206/261-1000
Application Energy Data Management; Single License; Online activation

Item No.: 2759-2110/261-1000
Application flexROOM; Single License; Online activation

Item No.: 2759-2015/260-1000
Application Grid Gateway; Single License

Item No.: 2759-2015/261-1000
Application Grid Gateway; Single License; Online activation

Item No.: 2759-204/261-1000
Application Lighting Management; Single License; Online activation

Item No.: 2759-241/261-1000
Application Weather Station; Single License; Online activation

Item No.: 2759-120/1121-1000
e!COCKPIT MTP; Single License; Online activation

Item No.: 2759-245/211-1000
Library Controller Redundancy Master; Single License; Online activation

Item No.: 2759-208/211-1000
Library MTP; Single License; Online activation

Item No.: 2759-203/211-1000
Library Power Plant Control; VDE-AR-N 4110 / 4120; Single License; Online activation

Item No.: 2759-207/271-1000
Visualization Energy Data Management; Single License; Online activation

Item No.: 2759-2103/271-1000
Visualization Lighting Management; L; Single License; Online activation

Item No.: 2759-2102/271-1000
Visualization Lighting Management; M; Single License; Online activation

Item No.: 2759-2101/271-1000
Visualization Lighting Management; S; Single License; Online activation

1.1.8 System enclosure

1.1.8.1 System enclosure

Item No.: 850-825
IP65 enclosure; Aluminium (RAL 7032); WxHxD (160x100x160 mm); 9 x M12, 4 x M20

Item No.: 850-826
IP65 enclosure; Aluminium (RAL 7032); WxHxD (240x100x160 mm); 4 x M20, 4 x M16, 14 x M12 cable grip

Item No.: 850-827
IP65 enclosure; Aluminium (RAL 7032); WxHxD (320x100x160 mm); 4 x M20, 8 x M16, 17 x M12 cable grip

Item No.: 850-828
IP65 enclosure; Aluminium (RAL 7032); WxHxD (480x100x160 mm); 4 x M20, 10 x M16, 35 x M12 cable grip

Item No.: 850-826/002-000
IP65 enclosure; Aluminium (RAL 7035); WxHxD (240x100x160 mm); 4 x M20, 4 x M16, 14 x M12 cable grip

Item No.: 850-827/002-000
IP65 enclosure; Aluminium (RAL 7035); WxHxD (320x100x160 mm); 4 x M20, 8 x M16, 17 x M12 cable grip

Item No.: 850-828/002-000
IP65 enclosure; Aluminium (RAL 7035); WxHxD (480x100x160 mm); 4 x M20, 10 x M16, 35 x M12 cable grip

Item No.: 850-834
IP65 enclosure; Polyester (RAL 7032); WxHxD (164x100x164 mm); 9 x M12, 4 x M20

Item No.: 850-835
IP65 enclosure; Polyester (RAL 7032); WxHxD (244x100x164 mm); 4 x M20, 4 x M16, 14 x M12 cable grip

Item No.: 850-836
IP65 enclosure; Polyester (RAL 7032); WxHxD (324x100x164 mm); 4 x M20, 8 x M16, 17 x M12 cable grip

Item No.: 850-814/002-000
IP65 enclosure; Sheet steel (RAL 7035); WxHxD (200x120x200 mm); without flange plate

Item No.: 850-815/002-000
IP65 enclosure; Sheet steel (RAL 7035); WxHxD (300x120x200 mm); without flange plate

Item No.: 850-816/002-000
IP65 enclosure; Sheet steel (RAL 7035); WxHxD (400x120x200 mm); without flange plate

Item No.: 850-817/002-000
IP65 enclosure; Sheet steel (RAL 7035); WxHxD (600x120x200 mm); without flange plate