Data Sheet | Item Number: 2202-2701

Double-deck terminal block; with push-button; Through/through terminal block; L/L; without marker carrier; suitable for Ex e II applications; for DIN-rail 35 x 15 and 35 x 7.5; 2.5 mm²; Push-in CAGE CLAMP®; 2,50 mm²; gray

https://www.wago.com/2202-2701

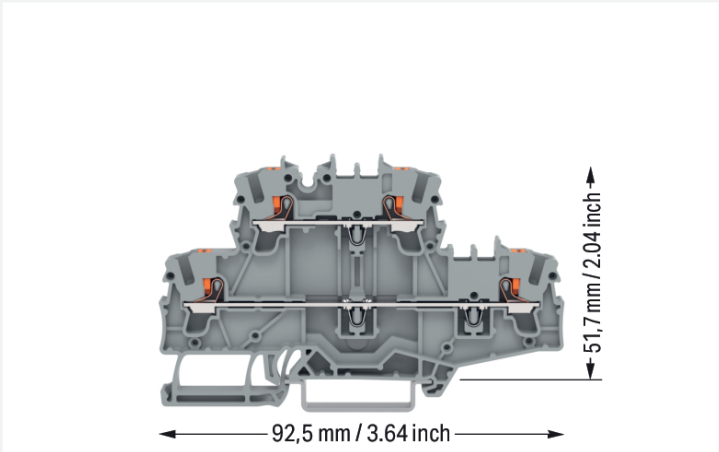

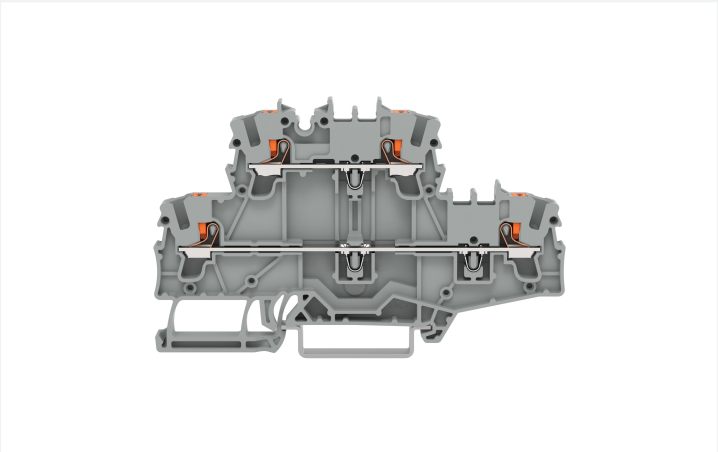

Color: gray

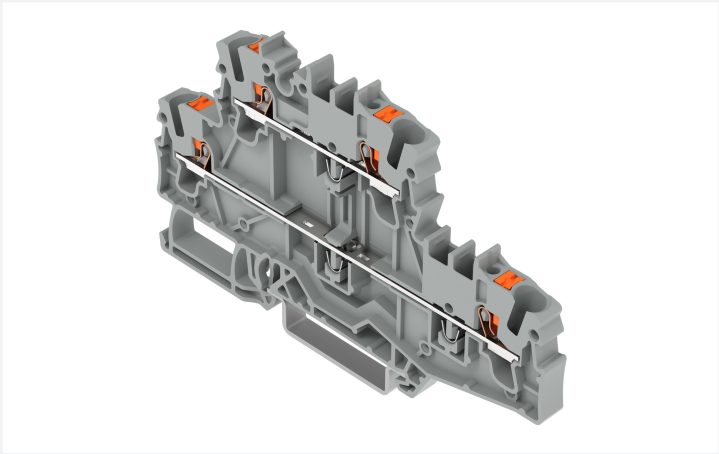

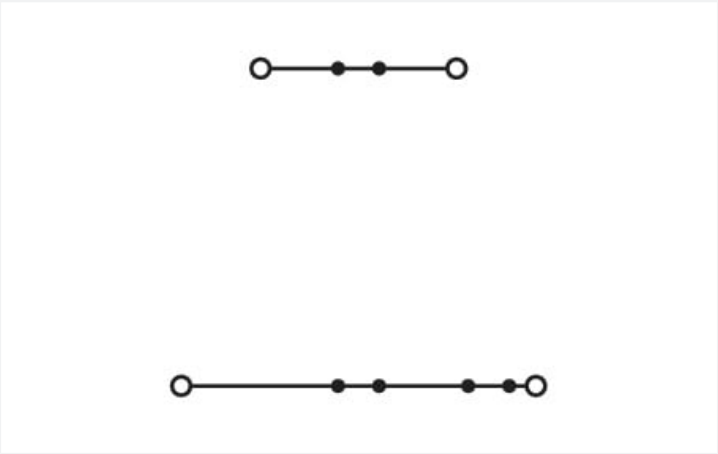

Similar to illustration

Electrical data

Ratings per	IEC/EN 60947-7-1		
Overvoltage category	III	III	II
Pollution degree	3	2	2
Nominal voltage	800 V	-	-
Rated surge voltage	8 kV	-	-
Rated current	24 A	-	-
Current at conductor cross-section (max.) mm²	28 A	-	-

Approvals per	UL 1059		
Use group	B	C	D
Rated voltage	600 V	600 V	-
Rated current	20 A	20 A	-

Approvals per	CSA 22.2 No 158		
Use group	B	C	D
Rated voltage	600 V	600 V	-
Rated current	24 A	24 A	-

Ex information	
Reference hazardous areas	See “Downloads – Documentation – Additional Information: Technical Section; Technical Explications”
Ratings per	ATEX: PTB 18 ATEX 1005 U / IECEx: PTB 18.0012U (Ex eb IIC Gb)
Rated voltage EN (Ex e II)	550 V
Rated current (Ex e II)	17.5 A
Rated current (Ex e II) with jumper	17 A

Continued on next page

Power Loss

Power loss, per pole (potential)	0.7661 W
Rated current I_N for specified power loss	24 A
Resistance value for specified, current-dependent power loss	0.00133 Ω

Connection data

Connection points	4
Total number of potentials	2
Number of levels	2
Number of jumper slots	4

Connection 1

Connection technology	Push-in CAGE CLAMP®
Actuation type	Push-button
Connectable conductor materials	Copper
Nominal cross-section	2.5 mm²
Solid conductor	0.25 … 4 mm² / 22 … 12 AWG
Solid conductor; push-in termination	0.75 … 4 mm² / 18 … 12 AWG
Fine-stranded conductor	0.25 … 4 mm² / 22 … 12 AWG
Fine-stranded conductor; with insulated ferrule	0.25 … 2.5 mm² / 22 … 14 AWG
Fine-stranded conductor; with ferrule; push-in termination	1 … 2.5 mm² / 18 … 14 AWG
Note (conductor cross-section)	Depending on the conductor characteristic, a conductor with a smaller cross-section can also be inserted via push-in termination.
Strip length	10 … 12 mm / 0.39 … 0.47 inches
Wiring direction	Front-entry wiring

Physical data

Width	5.2 mm / 0.205 inches
Height	92.5 mm / 3.642 inches
Depth from upper-edge of DIN-rail	51.7 mm / 2.035 inches

Mechanical data

Potential marking	L/L
Mounting type	DIN-35 rail
Marking level	Center/side marking

Material data

Note (material data)	Information on material specifications can be found here
Color	gray
Material group	I
Insulation material	Polyamide (PA66)
Flammability class per UL94	V0
Fire load	0.032 MJ
Actuator color	orange
Weight	12.5 g

 Continued on next page

Environmental requirements

Processing temperature	-35 … +85 °C
Continuous operating temperature	-60 … +105 °C

Commercial data

ETIM 8.0	EC000897
ETIM 7.0	EC000897
PU (SPU)	50 pcs
Packaging type	Box
Country of origin	DE
GTIN	4055143844598
Customs tariff number	85369010000

Environmental Product Compliance

RoHS Compliance Status	Compliant,No Exemption

Approvals / Certificates

General approvals

Approval	Standard	Certificate Name
CCA DEKRA Certification B.V.	EN 60947	NTR NL-7950
CSA DEKRA Certification B.V.	C22.2	70173745
KEMA/KEUR DEKRA Certification B.V.	EN 60947	71-124827
UL Underwriters Laboratories Inc.	UL 1059	E45172

Approvals for hazardous areas

Approval	Standard	Certificate Name
AEx Underwriters Laboratories Inc.	UL 60079	E185892 (AEx eb IIC resp. Ex eb IIC)
ATEX Physikalisch Technische Bundesanstalt	EN IEC 60079-0	PTB 18 ATEX 1005 U (II 2 G Ex eb IIC Gb bzw. I M 2 Ex eb I Mb)
CCCEx CQST/CNEx	GB/T 3836.3	2020312313000169
IECEx Physikalisch Technische Bundesanstalt	IEC 60079	IECEx PTB 18.0012U (Ex eb IIC Gb and Ex eb I Mb)

Declarations of conformity and manufacturer's declarations

Approval	Standard	Certificate Name
ATEX-Attestation of Conformity WAGO GmbH & Co. KG	-	-
EU-Declaration of Conformity WAGO GmbH & Co. KG	-	-
UK-Declaration of Conformity WAGO GmbH & Co. KG	-	-

 Continued on next page

Downloads

Environmental Product Compliance

Compliance Search

Environmental Product Compliance 2202-2701

Documentation

Additional Information

Technical Section	pdf 2240.62 KB	

Bid Text

2202-2701	20.05.2019	xml 4.17 KB	
2202-2701	20.05.2019	docx 14.95 KB	

CAD/CAE-Data

CAD data

2D/3D Models 2202-2701

CAE data

EPLAN Data Portal 2202-2701

ZUKEN Portal 2202-2701

1 Compatible Products

1.1 Required Accessories

1.1.1 End plate

1.1.1.1 End plate

Item No.: 2002-2791
End plate; 0.8 mm thick; gray

Item No.: 2002-2792
End plate; 0.8 mm thick; orange

1.2 Optional Accessories

1.2.1 DIN-rail

1.2.1.1 Mounting accessories

Item No.: 210-196
Aluminum carrier rail; 35 x 8.2 mm; 1.6 mm thick; 2 m long; unslotted; similar to EN 60715; silver-colored

Item No.: 210-198
Copper carrier rail; 35 x 15 mm; 2.3 mm thick; 2 m long; unslotted; according to EN 60715; copper-colored

Item No.: 210-508
Steel carrier rail; 35 x 15 mm; 1.5 mm thick; 2 m long; slotted; galvanized; similar to EN 60715; silver-colored

Item No.: 210-197
Steel carrier rail; 35 x 15 mm; 1.5 mm thick; 2 m long; slotted; similar to EN 60715; silver-colored

Item No.: 210-506
Steel carrier rail; 35 x 15 mm; 1.5 mm thick; 2 m long; unslotted; galvanized; similar to EN 60715; silver-colored

Item No.: 210-114
Steel carrier rail; 35 x 15 mm; 1.5 mm thick; 2 m long; unslotted; similar to EN 60715; silver-colored

Item No.: 210-118
Steel carrier rail; 35 x 15 mm; 2.3 mm thick; 2 m long; unslotted; according to EN 60715; silver-colored

Item No.: 210-115
Steel carrier rail; 35 x 7.5 mm; 1 mm thick; 2 m long; slotted; according to EN 60715; "Hole width 18 mm; silver-colored

 Continued on next page

1.2.1.1 Mounting accessories

Item No.: 210-112
Steel carrier rail; 35 x 7.5 mm; 1 mm thick; 2 m long; slotted; according to EN 60715; "Hole width 25 mm; silver-colored

Item No.: 210-504
Steel carrier rail; 35 x 7.5 mm; 1 mm thick; 2 m long; slotted; galvanized; according to EN 60715; silver-colored

Item No.: 210-113
Steel carrier rail; 35 x 7.5 mm; 1 mm thick; 2 m long; unslotted; according to EN 60715; silver-colored

Item No.: 210-505
Steel carrier rail; 35 x 7.5 mm; 1 mm thick; 2 m long; unslotted; galvanized; according to EN 60715; silver-colored

1.2.2 Ferrule

1.2.2.1 Ferrule

Item No.: 216-241
Ferrule; Sleeve for 0.5 mm² / 20 AWG; insulated; electro-tin plated; electrolytic copper; gastight crimped; acc. to DIN 46228, Part 4/09.90; white

Item No.: 216-242
Ferrule; Sleeve for 0.75 mm² / 18 AWG; insulated; electro-tin plated; electrolytic copper; gastight crimped; acc. to DIN 46228, Part 4/09.90; gray

Item No.: 216-262
Ferrule; Sleeve for 0.75 mm² / 18 AWG; insulated; electro-tin plated; electrolytic copper; gastight crimped; acc. to DIN 46228, Part 4/09.90; gray

Item No.: 216-243
Ferrule; Sleeve for 1 mm² / AWG 18; insulated; electro-tin plated; electrolytic copper; gastight crimped; acc. to DIN 46228, Part 4/09.90; red

Item No.: 216-263
Ferrule; Sleeve for 1 mm² / AWG 18; insulated; electro-tin plated; electrolytic copper; gastight crimped; acc. to DIN 46228, Part 4/09.90; red

Item No.: 216-244
Ferrule; Sleeve for 1.5 mm² / AWG 16; insulated; electro-tin plated; electrolytic copper; gastight crimped; acc. to DIN 46228, Part 4/09.90; black

Item No.: 216-264
Ferrule; Sleeve for 1.5 mm² / AWG 16; insulated; electro-tin plated; electrolytic copper; gastight crimped; acc. to DIN 46228, Part 4/09.90; black

Item No.: 216-246
Ferrule; Sleeve for 2.5 mm² / AWG 14; insulated; electro-tin plated; electrolytic copper; gastight crimped; acc. to DIN 46228, Part 4/09.90; blue

Item No.: 216-266
Ferrule; Sleeve for 2.5 mm² / AWG 14; insulated; electro-tin plated; electrolytic copper; gastight crimped; acc. to DIN 46228, Part 4/09.90; blue

1.2.3 Installation

1.2.3.1 Cover

Item No.: 709-156
Cover; Type 3; suitable for cover carrier, type 3; 1 m long; transparent

1.2.3.2 Cover carrier

Item No.: 709-169
Cover carrier; Type 3; incl. fixing/retaining screws and knurled nut; suitable for 279 to 282 and 880 Series rail-mounted terminal blocks; suitable for 264 Series miniature rail-mounted terminal blocks; suitable for 270 Series sensor and actuator terminal blocks; gray

 Continued on next page

1.2.4 Insulation stop

1.2.4.1 Insulation stop

Item No.: 2002-171
Insulation stop; 0.25 - 0.5 mm²; 5 pieces/ strip; light gray

Item No.: 2002-172
Insulation stop; 0.75 - 1 mm²; 5 pieces/ strip; dark gray

1.2.5 Jumper

1.2.5.1 Jumper

Item No.: 2002-400
Continuous jumper; 2-way; insulated; light gray

Item No.: 2002-423/000-006
Continuous jumper; from 1 to 3; insulated; blue

Item No.: 2002-423
Continuous jumper; from 1 to 3; insulated; light gray

Item No.: 2002-423/000-005
Continuous jumper; from 1 to 3; insulated; red

Item No.: 2002-424/000-006
Continuous jumper; from 1 to 4; insulated; blue

Item No.: 2002-424
Continuous jumper; from 1 to 4; insulated; light gray

Item No.: 2002-424/000-005
Continuous jumper; from 1 to 4; insulated; red

Item No.: 2002-406/020-000
Delta jumper; insulated; light gray

Item No.: 2002-410/000-006
Jumper; 10-way; insulated; blue

Item No.: 2002-410
Jumper; 10-way; insulated; light gray

Item No.: 2002-410/000-005
Jumper; 10-way; insulated; red

Item No.: 2002-402/000-006
Jumper; 2-way; insulated; blue

Item No.: 2002-402
Jumper; 2-way; insulated; light gray

Item No.: 2002-402/000-005
Jumper; 2-way; insulated; red

Item No.: 2002-403/000-006
Jumper; 3-way; insulated; blue

Item No.: 2002-403
Jumper; 3-way; insulated; light gray

Item No.: 2002-403/000-005
Jumper; 3-way; insulated; red

Item No.: 2002-404/000-006
Jumper; 4-way; insulated; blue

Item No.: 2002-404
Jumper; 4-way; insulated; light gray

Item No.: 2002-404/000-005
Jumper; 4-way; insulated; red

Item No.: 2002-405/000-006
Jumper; 5-way; insulated; blue

Item No.: 2002-405
Jumper; 5-way; insulated; light gray

Item No.: 2002-405/000-005
Jumper; 5-way; insulated; red

Item No.: 2002-406/000-006
Jumper; 6-way; insulated; blue

Item No.: 2002-406
Jumper; 6-way; insulated; light gray

Item No.: 2002-406/000-005
Jumper; 6-way; insulated; red

Item No.: 2002-407/000-006
Jumper; 7-way; insulated; blue

Item No.: 2002-407
Jumper; 7-way; insulated; light gray

Item No.: 2002-407/000-005
Jumper; 7-way; insulated; red

Item No.: 2002-408/000-006
Jumper; 8-way; insulated; blue

Item No.: 2002-408
Jumper; 8-way; insulated; light gray

Item No.: 2002-408/000-005
Jumper; 8-way; insulated; red

Item No.: 2002-409/000-006
Jumper; 9-way; insulated; blue

Item No.: 2002-409
Jumper; 9-way; insulated; light gray

Item No.: 2002-409/000-005
Jumper; 9-way; insulated; red

Item No.: 2002-440
Jumper; from 1 to 10; insulated; light gray

Item No.: 2002-433
Jumper; from 1 to 3; insulated; light gray

Item No.: 2002-434
Jumper; from 1 to 4; insulated; light gray

Item No.: 2002-435
Jumper; from 1 to 5; insulated; light gray

Item No.: 2002-436
Jumper; from 1 to 6; insulated; light gray

Item No.: 2002-437
Jumper; from 1 to 7; insulated; light gray

Item No.: 2002-438
Jumper; from 1 to 8; insulated; light gray

Item No.: 2002-439
Jumper; from 1 to 9; insulated; light gray

Item No.: 2002-480
Staggered jumper; 10-way; insulated; light gray

 Continued on next page

1.2.5.1 Jumper

Item No.: 2002-481
Staggered jumper; 11-way; insulated; light gray

Item No.: 2002-482
Staggered jumper; 12-way; insulated; light gray

Item No.: 2002-473/011-000
Staggered jumper; 2-way; from 1 to 3; insulated; light gray

Item No.: 2002-472
Staggered jumper; 2-way; insulated; light gray

Item No.: 2002-473
Staggered jumper; 3-way; insulated; light gray

Item No.: 2002-475/011-000
Staggered jumper; 3-way; insulated; light gray

Item No.: 2002-474
Staggered jumper; 4-way; insulated; light gray

Item No.: 2002-475
Staggered jumper; 5-way; insulated; light gray

Item No.: 2002-476
Staggered jumper; 6-way; insulated; light gray

Item No.: 2002-477
Staggered jumper; 7-way; insulated; light gray

Item No.: 2002-478
Staggered jumper; 8-way; insulated; light gray

Item No.: 2002-479
Staggered jumper; 9-way; insulated; light gray

Item No.: 2002-477/011-000
Staggered jumper; insulated; light gray

Item No.: 2002-479/011-000
Staggered jumper; insulated; light gray

Item No.: 2002-481/011-000
Staggered jumper; insulated; light gray

Item No.: 2002-405/011-000
Star point jumper; 3-way; insulated; light gray

Item No.: 2002-492
Vertical jumper; insulated; light gray

Item No.: 2002-492/000-012
Vertical jumper; insulated; orange

Item No.: 210-103
Wire commoning chain; insulated; black

Item No.: 210-123
Wire commoning chain; insulated; blue

1.2.6 Marking

1.2.6.1 Group marker carrier

Item No.: 2009-191
Group marker carrier; gray

Item No.: 2009-192
Group marker carrier; gray

Item No.: 2009-193
Group marker carrier; gray

1.2.6.2 Marker

Item No.: 2009-145/000-006
Mini-WSB Inline; for Smart Printer; 1700 pieces on roll; stretchable 5 - 5.2 mm; plain; snap-on type; blue

Item No.: 2009-145/000-007
Mini-WSB Inline; for Smart Printer; 1700 pieces on roll; stretchable 5 - 5.2 mm; plain; snap-on type; gray

Item No.: 2009-145/000-023
Mini-WSB Inline; for Smart Printer; 1700 pieces on roll; stretchable 5 - 5.2 mm; plain; snap-on type; green

Item No.: 2009-145/000-012
Mini-WSB Inline; for Smart Printer; 1700 pieces on roll; stretchable 5 - 5.2 mm; plain; snap-on type; orange

Item No.: 2009-145/000-005
Mini-WSB Inline; for Smart Printer; 1700 pieces on roll; stretchable 5 - 5.2 mm; plain; snap-on type; red

Item No.: 2009-145/000-024
Mini-WSB Inline; for Smart Printer; 1700 pieces on roll; stretchable 5 - 5.2 mm; plain; snap-on type; violet

Item No.: 2009-145
Mini-WSB Inline; for Smart Printer; 1700 pieces on roll; stretchable 5 - 5.2 mm; plain; snap-on type; white

Item No.: 2009-145/000-002
Mini-WSB Inline; for Smart Printer; 1700 pieces on roll; stretchable 5 - 5.2 mm; plain; snap-on type; yellow

Item No.: 248-501/000-006
Mini-WSB marking card; as card; not stretchable; plain; snap-on type; blue

Item No.: 248-501/000-007
Mini-WSB marking card; as card; not stretchable; plain; snap-on type; gray

Item No.: 248-501/000-023
Mini-WSB marking card; as card; not stretchable; plain; snap-on type; green

Item No.: 248-501/000-017
Mini-WSB marking card; as card; not stretchable; plain; snap-on type; light green

Item No.: 248-501/000-012
Mini-WSB marking card; as card; not stretchable; plain; snap-on type; orange

Item No.: 248-501/000-005
Mini-WSB marking card; as card; not stretchable; plain; snap-on type; red

Item No.: 248-501/000-024
Mini-WSB marking card; as card; not stretchable; plain; snap-on type; violet

Item No.: 248-501
Mini-WSB marking card; as card; not stretchable; plain; snap-on type; white

Item No.: 248-501/000-002
Mini-WSB marking card; as card; not stretchable; plain; snap-on type; yellow

Item No.: 793-5501/000-006
WMB marking card; as card; for terminal block width 5 - 17.5 mm; stretchable 5 - 5.2 mm; plain; snap-on type; blue

Item No.: 793-5501/000-014
WMB marking card; as card; for terminal block width 5 - 17.5 mm; stretchable 5 - 5.2 mm; plain; snap-on type; brown

Item No.: 793-5501/000-007
WMB marking card; as card; for terminal block width 5 - 17.5 mm; stretchable 5 - 5.2 mm; plain; snap-on type; gray

 Continued on next page

1.2.6.2 Marker

Item No.: 793-5501/000-023
WMB marking card; as card; for terminal block width 5 - 17.5 mm; stretchable 5 - 5.2 mm; plain; snap-on type; green

Item No.: 793-5501/000-017
WMB marking card; as card; for terminal block width 5 - 17.5 mm; stretchable 5 - 5.2 mm; plain; snap-on type; light green

Item No.: 793-5501/000-012
WMB marking card; as card; for terminal block width 5 - 17.5 mm; stretchable 5 - 5.2 mm; plain; snap-on type; orange

Item No.: 793-5501/000-005
WMB marking card; as card; for terminal block width 5 - 17.5 mm; stretchable 5 - 5.2 mm; plain; snap-on type; red

Item No.: 793-5501/000-024
WMB marking card; as card; for terminal block width 5 - 17.5 mm; stretchable 5 - 5.2 mm; plain; snap-on type; violet

Item No.: 793-5501
WMB marking card; as card; for terminal block width 5 - 17.5 mm; stretchable 5 - 5.2 mm; plain; snap-on type; white

Item No.: 793-5501/000-002
WMB marking card; as card; for terminal block width 5 - 17.5 mm; stretchable 5 - 5.2 mm; plain; snap-on type; yellow

Item No.: 2009-115/000-006
WMB-Inline; for Smart Printer; 1500 pieces on roll; stretchable 5 - 5.2 mm; plain; snap-on type; blue

Item No.: 2009-115/000-007
WMB-Inline; for Smart Printer; 1500 pieces on roll; stretchable 5 - 5.2 mm; plain; snap-on type; gray

Item No.: 2009-115/000-023
WMB-Inline; for Smart Printer; 1500 pieces on roll; stretchable 5 - 5.2 mm; plain; snap-on type; green

Item No.: 2009-115/000-017
WMB-Inline; for Smart Printer; 1500 pieces on roll; stretchable 5 - 5.2 mm; plain; snap-on type; light green

Item No.: 2009-115/000-012
WMB-Inline; for Smart Printer; 1500 pieces on roll; stretchable 5 - 5.2 mm; plain; snap-on type; orange

Item No.: 2009-115/000-005
WMB-Inline; for Smart Printer; 1500 pieces on roll; stretchable 5 - 5.2 mm; plain; snap-on type; red

Item No.: 2009-115/000-024
WMB-Inline; for Smart Printer; 1500 pieces on roll; stretchable 5 - 5.2 mm; plain; snap-on type; violet

Item No.: 2009-115
WMB-Inline; for Smart Printer; 1500 pieces on roll; stretchable 5 - 5.2 mm; plain; snap-on type; white

Item No.: 2009-115/000-002
WMB-Inline; for Smart Printer; 1500 pieces on roll; stretchable 5 - 5.2 mm; plain; snap-on type; yellow

1.2.6.3 Marker carrier

Item No.: 2002-121
Adaptor; gray

Item No.: 2002-161
Adaptor; gray

Item No.: 2009-198
Adaptor; gray

1.2.6.4 Marking strip

Item No.: 2009-110
Marking strips; for Smart Printer; on reel; not stretchable; plain; snap-on type; white

1.2.7 Push-in type wire jumper

1.2.7.1 Jumper

Item No.: 2009-414
Push-in type wire jumper; 1.5 mm²; insulated; 110 mm long; black

Item No.: 2009-414/000-005
Push-in type wire jumper; 1.5 mm²; insulated; 110 mm long; black

Item No.: 2009-416
Push-in type wire jumper; 1.5 mm²; insulated; 250 mm long; black

Item No.: 2009-414/000-006
Push-in type wire jumper; insulated; 110 mm long; black

Item No.: 2009-412
Push-in type wire jumper; insulated; 60 mm long; black

 Continued on next page

1.2.8 Screwless end stop

1.2.8.1 Mounting accessories

Item No.: 249-117
Screwless end stop; 10 mm wide; for DIN-rail 35 x 15 and 35 x 7.5; gray

Item No.: 249-116
Screwless end stop; 6 mm wide; for DIN-rail 35 x 15 and 35 x 7.5; gray

1.2.9 Test and measurement

1.2.9.1 Testing accessories

Item No.: 2009-174
Test plug adapter; for 4 mm Ø test plugs; for testing TOPJOB®S rail-mounted terminal blocks; gray

Item No.: 2009-182
Testing tap; for max. 2.5 mm²; tool-free connection for individual test wires 0.08 - 2.5 mm; gray

1.2.10 Tool

1.2.10.1 Operating tool

Item No.: 210-658
Operating tool; Blade: 3.5 x 0.5 mm; with a partially insulated shaft; angled; short; multicoloured

Item No.: 210-720
Operating tool; Blade: 3.5 x 0.5 mm; with a partially insulated shaft; multicoloured

Installation Notes

Conductor termination

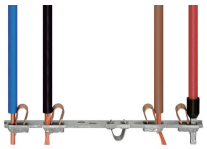

All conductor types at a glance

Push-in termination of solid and ferruled conductors

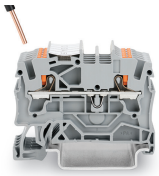

Push-in termination of solid and ferruled conductors

Insert fine-stranded conductors via operating tool.

Removing all conductors via operating tool.

 Continued on next page

Commoning

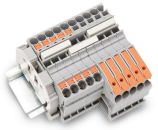

Insert a push-in type jumper bar and push down until it hits the backstop.

Testing

Testing with a 2 mm Ø test plug (max. 42 V).

Marking

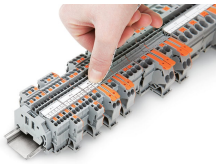

Snapping a marking strip into a marker slot.

Snapping a marking strip into the marker slot.